Applicable Country & Regions:

All Regions

Product Service Manual – Level 3

Service Manual for BenQ:
Projector/
W1070, W1080ST
< 9H.J7L77.17X, 9H.J7M77.17X>

Version: 00a
Date:2012/10/04

Notice:

For RO to input specific “Legal Requirement” in specific NS regarding to responsibility and liability statements.

Please check BenQ’s eSupport web site, http://esupport.benq.com, to ensure that you have the most recent version of this manual.

First Edition (Oct. 2012)
© Copyright BenQ Corporation 2007. All Right Reserved.

Schematics—Main board:

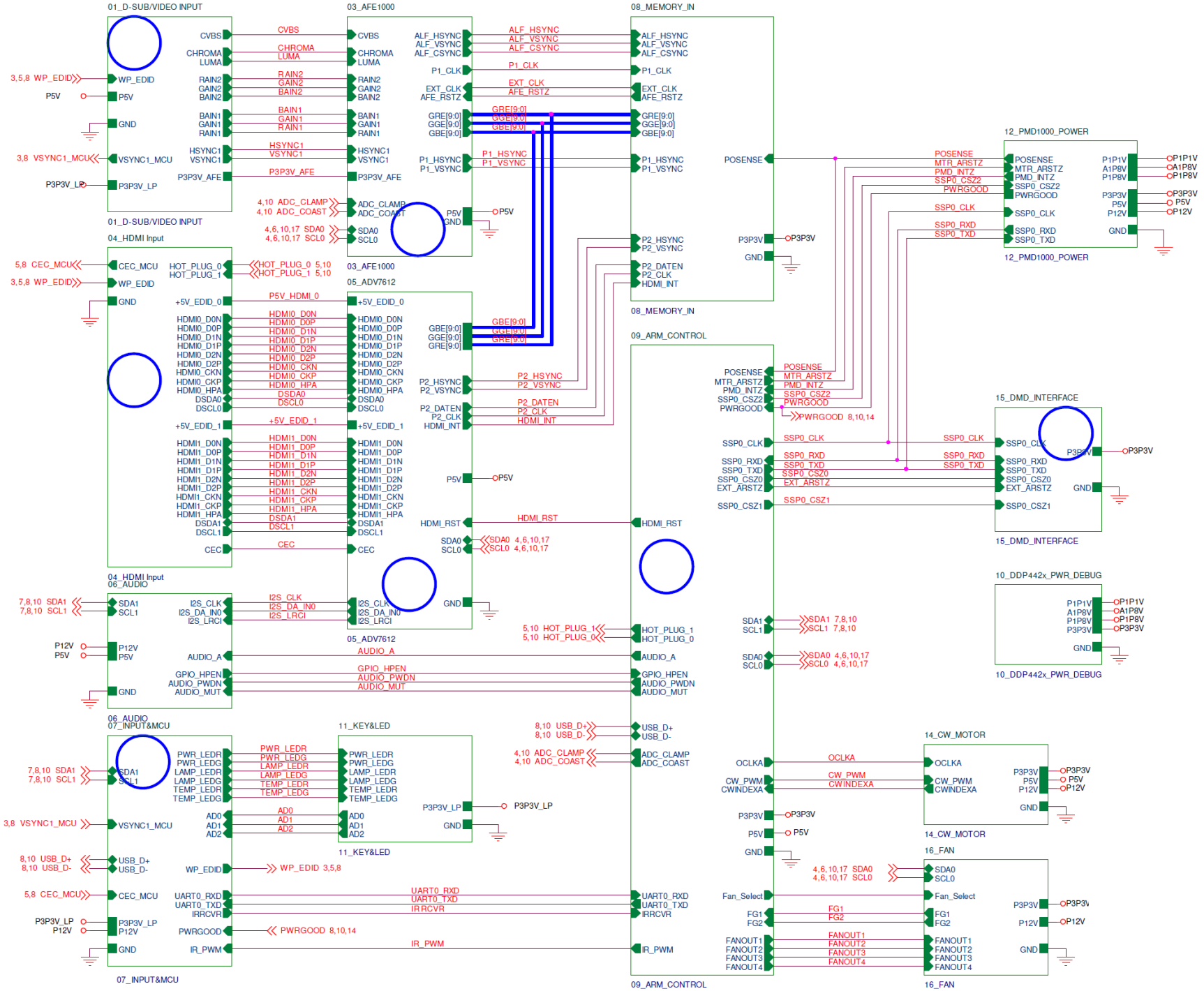

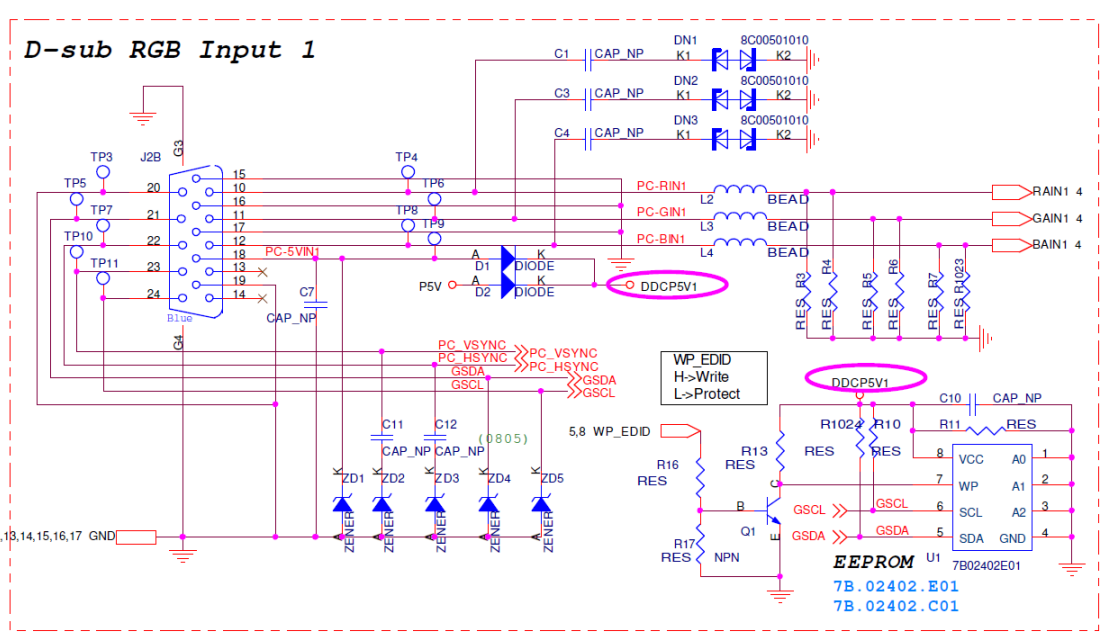
D-sub RGB Input 1
J2B
TP3
TP4
TP5
TP6
TP7
TP8
TP9
TP10
TP11
PC-RIN1
PC-GIN1
PC-BIN1
PC-5VIN1
P5V
DDCP5V1
RAIN1 4
GAIN1 4
BAIN1 4
PC_VSYNC
PC_HSYNC
GSDA
GSCL
WP_EDID
H->Write
L->Protect
5,8 WP_EDID
11,12,13,14,15,16,17 GND
EEPROM U1
7B02402E01
7B.02402.E01
7B.02402.C01

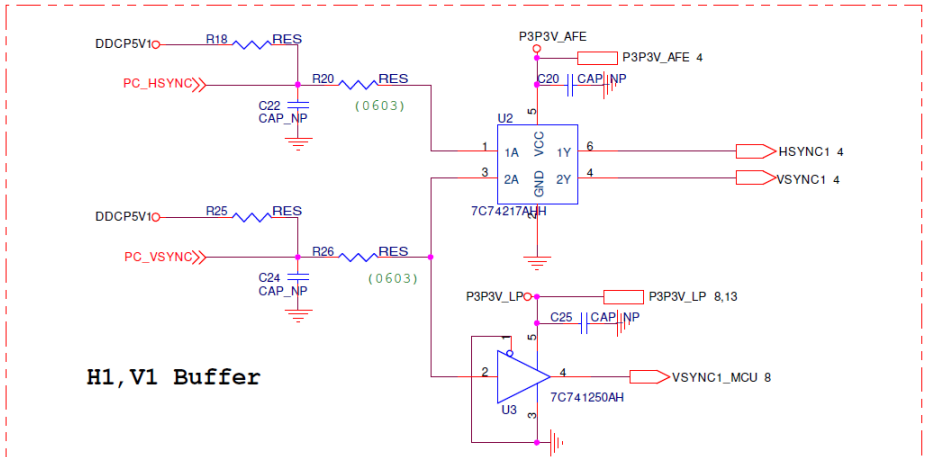
H1,V1 Buffer
DDCP5V1
PC_HSYNC
PC_VSYNC
P3P3V_AFE
P3P3V_LP
HSYNC1 4
VSYNC1 4
VSYNC1_MCU 8
7C74217AH
7C741250AH

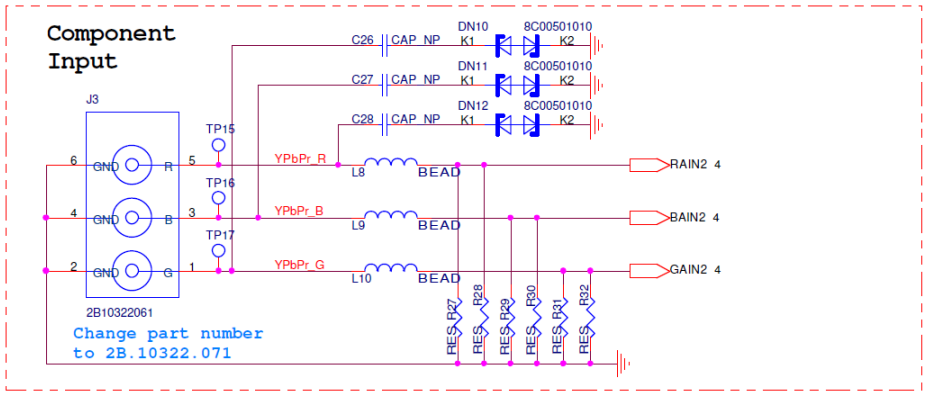
Component Input
J3
TP15
TP16
TP17
YPbPr_R
YPbPr_B
YPbPr_G
RAIN2 4
BAIN2 4
GAIN2 4
2B10322061
Change part number
to 2B.10322.071

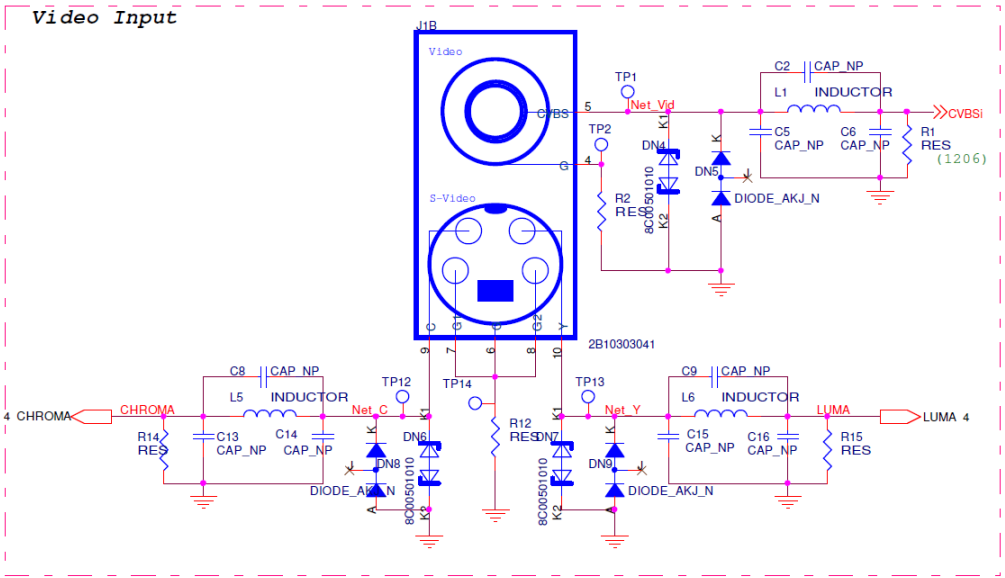
Video Input
J1B
Video
S-Video
CVBS
TP1
TP2
Net_Vid
CVBSi
2B10303041
CHROMA
LUMA
Net_C
Net_Y
DIODE_AKJ_N

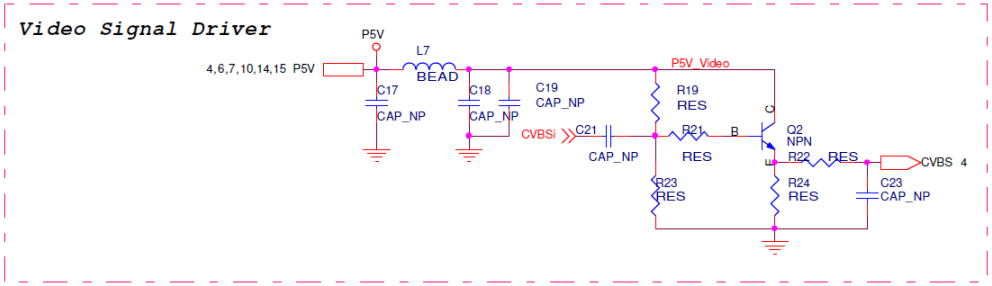
Video Signal Driver
P5V
P5V_Video
CVBSi
CVBS 4

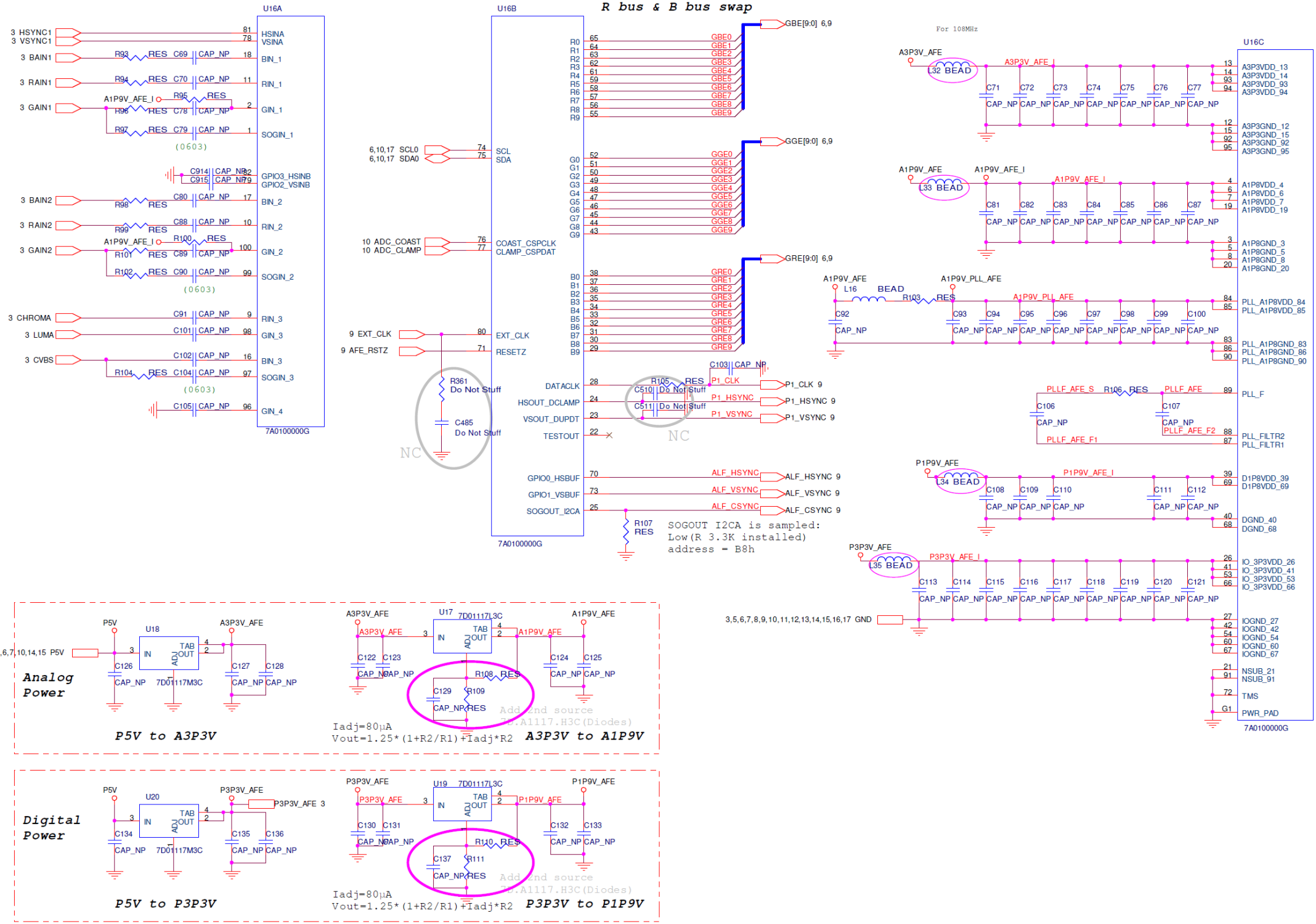
R bus & B bus swap
U16A
U16B
U16C
7A0100000G
3 HSYNC1
3 VSYNC1
3 BAIN1
3 RAIN1
3 GAIN1
3 BAIN2
3 RAIN2
3 GAIN2
3 CHROMA
3 LUMA
3 CVBS
HSINA
VSINA
BIN_1
RIN_1
GIN_1
SOGIN_1
GPIO3_HSINB
GPIO2_VSINB
BIN_2
RIN_2
GIN_2
SOGIN_2
RIN_3
GIN_3
BIN_3
SOGIN_3
GIN_4
(0603)
6,10,17 SCL0
6,10,17 SDA0
SCL
SDA
10 ADC_COAST
10 ADC_CLAMP
COAST_CSPCLK
CLAMP_CSPDAT
9 EXT_CLK
9 AFE_RSTZ
EXT_CLK
RESETZ
R361
Do Not Stuff
C485
Do Not Stuff
NC
GBE[9:0] 6,9
GGE[9:0] 6,9
GRE[9:0] 6,9
DATACLK
HSOUT_DCLAMP
VSOUT_DUPDT
TESTOUT
P1_CLK 9
P1_HSYNC 9
P1_VSYNC 9
GPIO0_HSBUF
GPIO1_VSBUF
SOGOUT_I2CA
ALF_HSYNC
ALF_VSYNC
ALF_CSYNC
ALF_HSYNC 9
ALF_VSYNC 9
ALF_CSYNC 9
R107
RES
SOGOUT I2CA is sampled:
Low(R 3.3K installed)
address = B8h
For 108MHz
A3P3V_AFE
A1P9V_AFE
A1P9V_PLL_AFE
P1P9V_AFE
P3P3V_AFE
L32 BEAD
L33 BEAD
L16 BEAD
L34 BEAD
L35 BEAD
A3P3VDD_13
A3P3VDD_14
A3P3VDD_93
A3P3VDD_94
A3P3GND_12
A3P3GND_15
A3P3GND_92
A3P3GND_95
A1P8VDD_4
A1P8VDD_6
A1P8VDD_7
A1P8VDD_19
A1P8GND_3
A1P8GND_5
A1P8GND_8
A1P8GND_20
PLL_A1P8VDD_84
PLL_A1P8VDD_85
PLL_A1P8GND_83
PLL_A1P8GND_86
PLL_A1P8GND_90
PLL_F
PLL_FILTR2
PLL_FILTR1
D1P8VDD_39
D1P8VDD_69
DGND_40
DGND_68
IO_3P3VDD_26
IO_3P3VDD_41
IO_3P3VDD_53
IO_3P3VDD_66
IOGND_27
IOGND_42
IOGND_54
IOGND_60
IOGND_67
NSUB_21
NSUB_91
TMS
PWR_PAD
3,5,6,7,8,9,10,11,12,13,14,15,16,17 GND
Analog Power
P5V to A3P3V
A3P3V to A1P9V
Digital Power
P5V to P3P3V
P3P3V to P1P9V
7D01117M3C
Iadj=80μA
Vout=1.25*(1+R2/R1)+Iadj*R2
Add 2nd source
TD.A1117.H3C(Diodes)

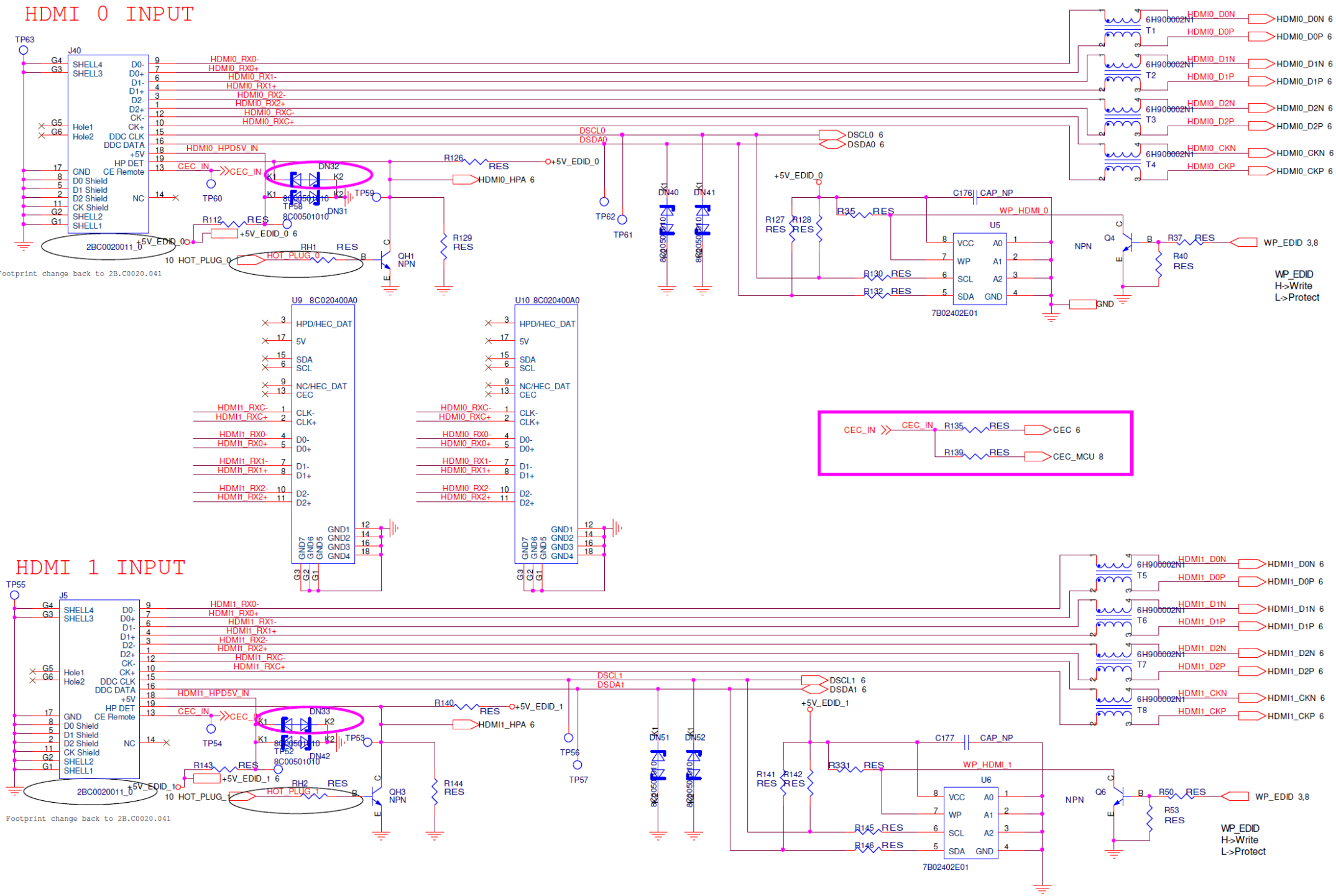
HDMI 0 INPUT
HDMI 1 INPUT
J40
J5
U9 8C020400A0
U10 8C020400A0
U5
U6
7B02402E01
HDMI0_RX0-
HDMI0_RX0+
HDMI0_RX1-
HDMI0_RX1+
HDMI0_RX2-
HDMI0_RX2+
HDMI0_RXC-
HDMI0_RXC+
HDMI0_HPD5V_IN
HDMI0_HPA 6
HDMI1_RX0-
HDMI1_RX0+
HDMI1_RX1-
HDMI1_RX1+
HDMI1_RX2-
HDMI1_RX2+
HDMI1_RXC-
HDMI1_RXC+
HDMI1_HPD5V_IN
HDMI1_HPA 6
CEC_IN
CEC 6
CEC_MCU 8
DSCL0
DSDA0
DSCL1
DSDA1
+5V_EDID_0
+5V_EDID_1
WP_HDMI_0
WP_HDMI_1
WP_EDID 3,8
WP_EDID
H->Write
L->Protect
HOT_PLUG_0
HOT_PLUG_1
Footprint change back to 2B.C0020.041

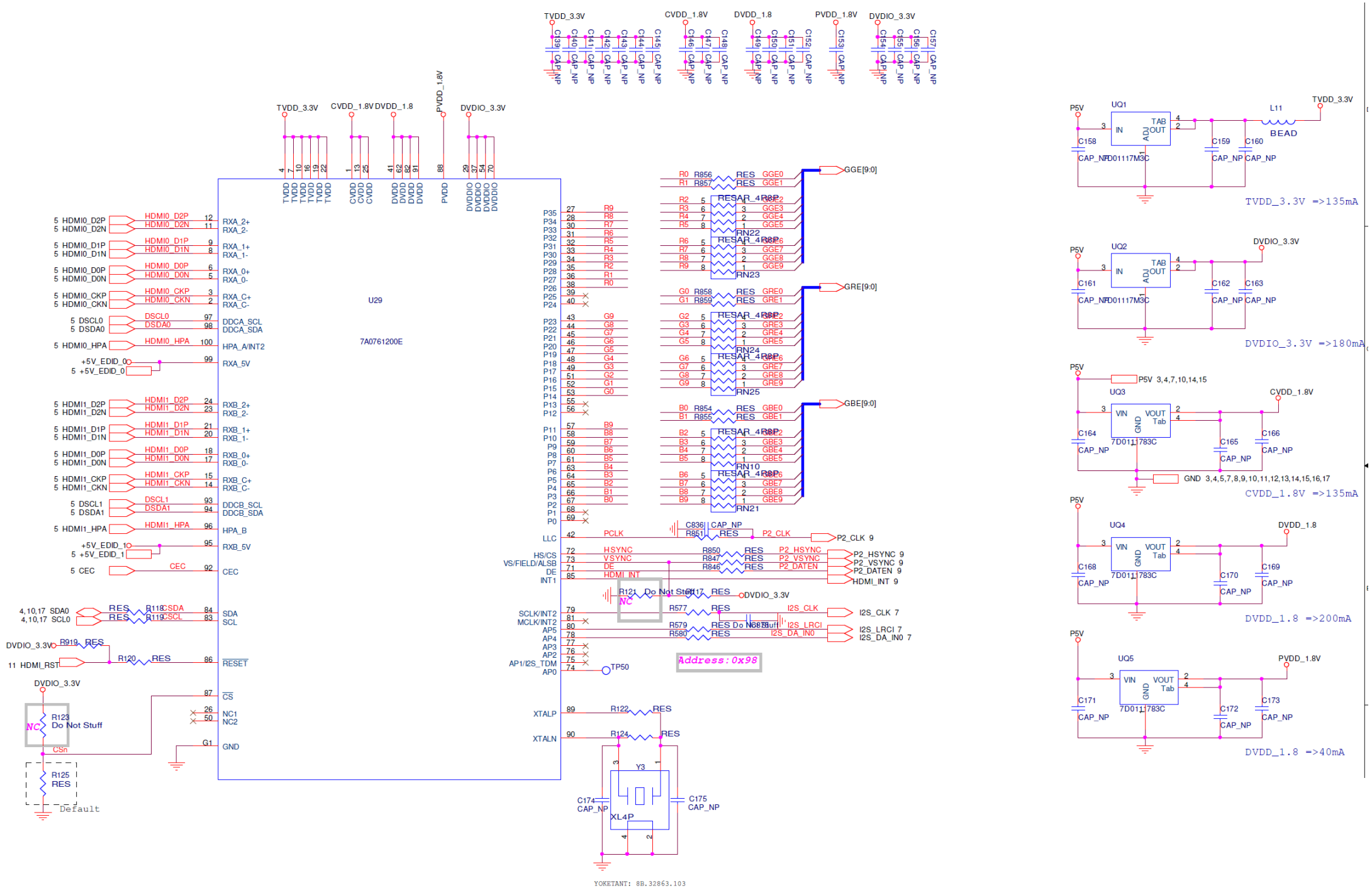
TVDD_3.3V
CVDD_1.8V
DVDD_1.8
PVDD_1.8V
DVDIO_3.3V
U29
7A0761200E
HDMI0_D2P
HDMI0_D2N
HDMI0_D1P
HDMI0_D1N
HDMI0_D0P
HDMI0_D0N
HDMI0_CKP
HDMI0_CKN
DSCL0
DSDA0
HDMI0_HPA
+5V_EDID_0
HDMI1_D2P
HDMI1_D2N
HDMI1_D1P
HDMI1_D1N
HDMI1_D0P
HDMI1_D0N
HDMI1_CKP
HDMI1_CKN
DSCL1
DSDA1
HDMI1_HPA
+5V_EDID_1
CEC
SDA
SCL
RESET
CS
NC1
NC2
GND
RXA_2+
RXA_2-
RXA_1+
RXA_1-
RXA_0+
RXA_0-
RXA_C+
RXA_C-
DDCA_SCL
DDCA_SDA
HPA_A/INT2
RXA_5V
RXB_2+
RXB_2-
RXB_1+
RXB_1-
RXB_0+
RXB_0-
RXB_C+
RXB_C-
DDCB_SCL
DDCB_SDA
HPA_B
RXB_5V
GGE[9:0]
GRE[9:0]
GBE[9:0]
RN22
RN23
RN24
RN25
RN10
RN21
PCLK
P2_CLK
HSYNC
VSYNC
DE
HDMI_INT
P2_HSYNC
P2_VSYNC
P2_DATEN
HDMI_INT
I2S_CLK
I2S_LRCI
I2S_DA_IN0
Address:0x98
XTALP
XTALN
Y3
XL4P
YOKETANT: 8B.32863.103
UQ1
UQ2
UQ3
UQ4
UQ5
7D01117M3C
7D011783C
L11
BEAD
TVDD_3.3V =>135mA
DVDIO_3.3V =>180mA
CVDD_1.8V =>135mA
DVDD_1.8 =>200mA
DVDD_1.8 =>40mA

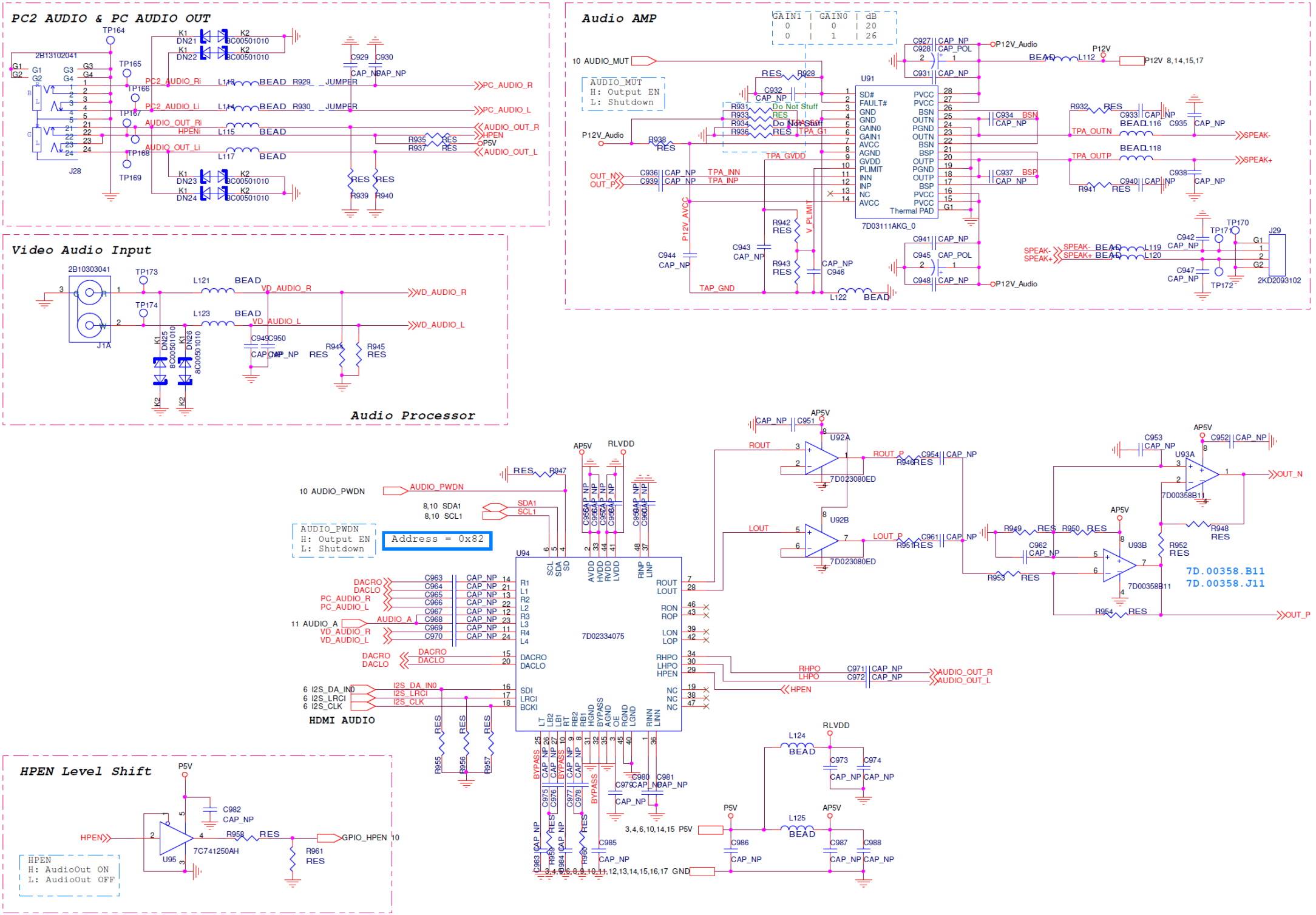
PC2 AUDIO & PC AUDIO OUT
TP164
TP165
TP166
TP167
TP168
TP169
2B13102041
J28
K1 DN21 K2 BC00501010
K1 DN22 K2 BC00501010
K1 DN23 K2 BC00501010
K1 DN24 K2 BC00501010
C929 C930 CAP_NP
PC2_AUDIO_Ri
PC2_AUDIO_Li
AUDIO_OUT_Ri
HPENi
AUDIO_OUT_Li
L113 BEAD
L114 BEAD
L115 BEAD
L117 BEAD
R929 JUMPER
R930 JUMPER
R935 RES
R937 RES
R939 RES
R940 RES
PC_AUDIO_R
PC_AUDIO_L
AUDIO_OUT_R
HPEN
P5V
AUDIO_OUT_L
Video Audio Input
2B10303041
J1A
TP173
TP174
L121 BEAD
L123 BEAD
VD_AUDIO_R
VD_AUDIO_L
C949 C950 CAP_NP
R945 RES
R945 RES
K1 DN25 8C00501010
K1 DN26 8C00501010
K2
K2
Audio Processor
Audio AMP
GAIN1 | GAIN0 | dB
0 | 0 | 20
0 | 1 | 26
10 AUDIO_MUT
AUDIO_MUT
H: Output EN
L: Shutdown
P12V_Audio
R928 RES
C932 CAP_NP
R931 Do Not Stuff
R933 RES
R934 Do Not Stuff
R936 RES
R938 RES
U91
7D03111AKG_0
Thermal PAD
SD#
FAULT#
GND
GND
GAIN0
GAIN1
AVCC
AGND
GVDD
PLIMIT
INN
INP
NC
AVCC
PVCC
PVCC
BSN
OUTN
PGND
OUTN
BSN
BSP
OUTP
PGND
OUTP
BSP
PVCC
PVCC
G1
TPA_GVDD
TPA_G1
TPA_INN
TPA_INP
V_PLIMIT
P12V_AVCC
TAP_GND
OUT_N
OUT_P
C936 CAP_NP
C939 CAP_NP
C944 CAP_NP
C943 CAP_NP
R942 RES
R943 RES
C946 CAP_NP
C927 CAP_NP
C928 CAP_POL
C931 CAP_NP
C941 CAP_NP
C945 CAP_POL
C948 CAP_NP
C934 BSN CAP_NP
C937 BSP CAP_NP
L122 BEAD
L112 BEAD
P12V 8,14,15,17
R932 RES
C933 CAP_NP
BEAD L116
C935 CAP_NP
TPA_OUTN
SPEAK-
BEAD L118
TPA_OUTP
SPEAK+
C940 CAP_NP
R941 RES
C938 CAP_NP
SPEAK- BEAD L119
SPEAK+ BEAD L120
TP170
TP171
TP172
J29
2KD2093102
C942 CAP_NP
C947 CAP_NP
HDMI AUDIO
U94
7D02334075
10 AUDIO_PWDN
AUDIO_PWDN
8,10 SDA1
8,10 SCL1
AUDIO_PWDN
H: Output EN
L: Shutdown
Address = 0x82
R947 RES
AP5V
RLVDD
C956A CAP_NP
C957A CAP_NP
C958A CAP_NP
C959A CAP_NP
C960A CAP_NP
SCL
SDA
SD
AVDD
HVDD
RVDD
LVDD
RINP
LINP
ROUT
LOUT
RON
ROP
LON
LOP
RHPO
LHPO
HPEN
NC
NC
NC
SDI
LRCI
BCKI
DACRO
DACLO
PC_AUDIO_R
PC_AUDIO_L
11 AUDIO_A
AUDIO_A
VD_AUDIO_R
VD_AUDIO_L
C963 CAP_NP
C964 CAP_NP
C965 CAP_NP
C966 CAP_NP
C967 CAP_NP
C968 CAP_NP
C969 CAP_NP
C970 CAP_NP
6 I2S_DA_IN0
6 I2S_LRCI
6 I2S_CLK
I2S_DA_IN0
I2S_LRCI
I2S_CLK
R955 RES
R956 RES
R957 RES
C971 CAP_NP
C972 CAP_NP
AUDIO_OUT_R
AUDIO_OUT_L
U92A
U92B
7D023080ED
7D023080ED
ROUT_P
LOUT_P
R948 RES
R961 RES
C954 CAP_NP
C961 CAP_NP
U93A
U93B
7D00358B11
7D00358B11
R949 RES
R950 RES
R953 RES
R954 RES
R952 RES
R948 RES
C962 CAP_NP
C953 CAP_NP
C952 CAP_NP
OUT_N
OUT_P
7D.00358.B11
7D.00358.J11
L124 BEAD
L125 BEAD
C973 CAP_NP
C974 CAP_NP
C979 CAP_NP
C980 CAP_NP
C981 CAP_NP
C985 CAP_NP
C986 CAP_NP
C987 CAP_NP
C988 CAP_NP
3,4,6,10,14,15 P5V
3,4,5,6,8,9,10,11,12,13,14,15,16,17 GND
HPEN Level Shift
P5V
HPEN
U95
7C741250AH
C982 CAP_NP
R958 RES
R961 RES
GPIO_HPEN 10
HPEN
H: AudioOut ON
L: AudioOut OFF

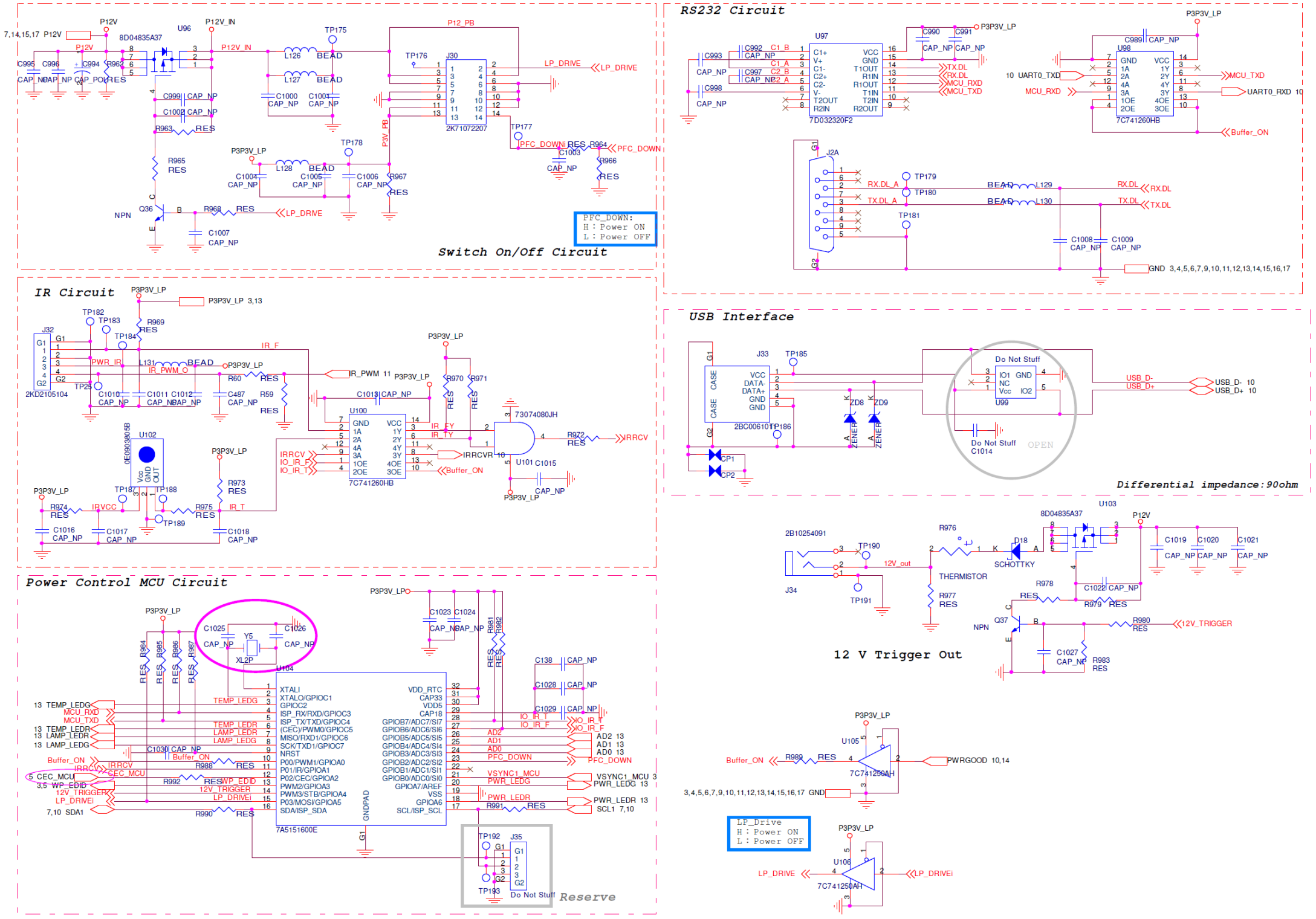
Switch On/Off Circuit
PFC_DOWN:
H : Power ON
L : Power OFF
RS232 Circuit
IR Circuit
USB Interface
Differential impedance:90ohm
Power Control MCU Circuit
12 V Trigger Out
Reserve
LP_Drive
H : Power ON
L : Power OFF
Do Not Stuff
OPEN

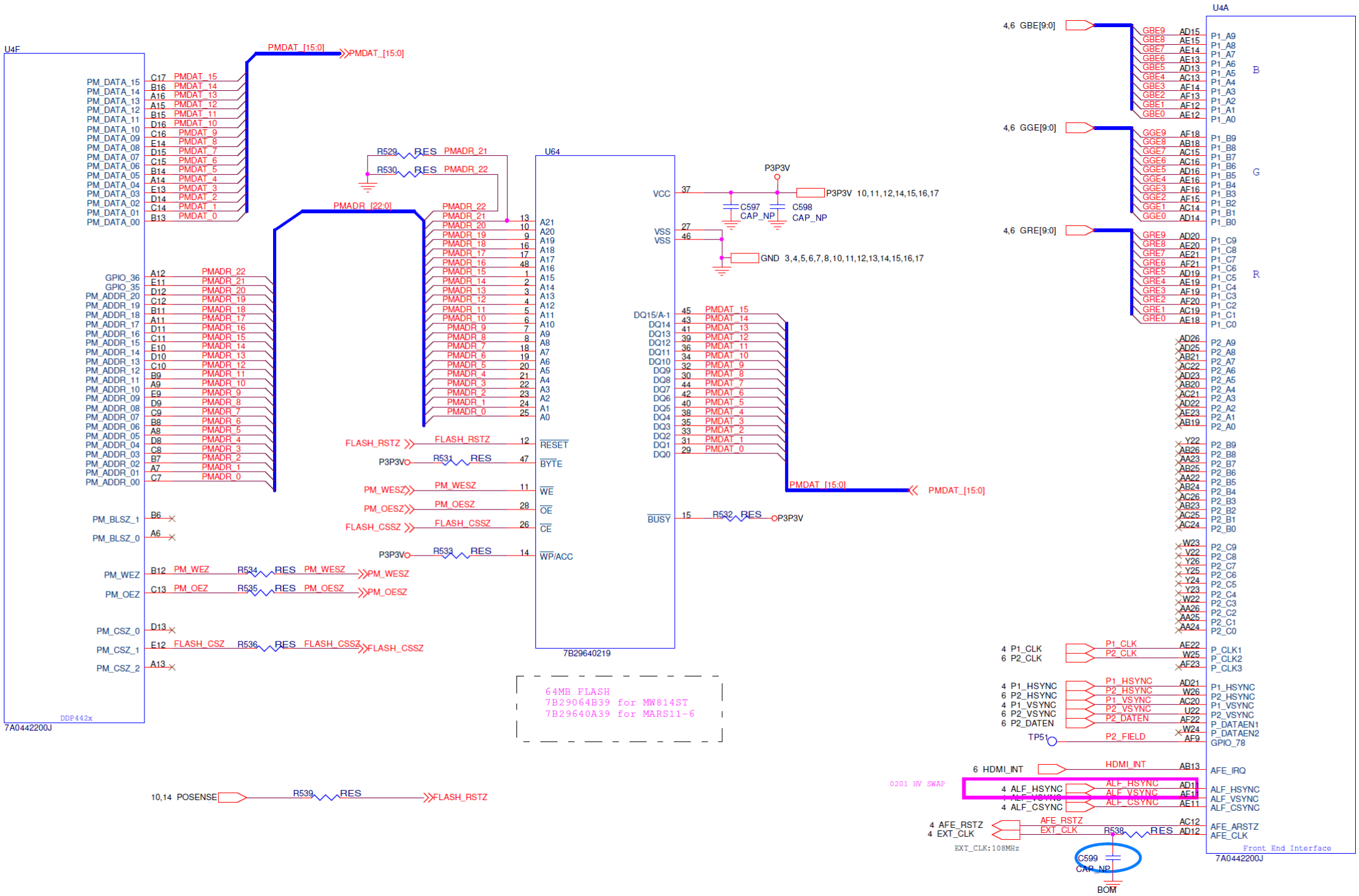
U4F
DDP442x
7A0442200J
PMDAT_[15:0]
PMDAT_15
PMDAT_14
PMDAT_13
PMDAT_12
PMDAT_11
PMDAT_10
PMDAT_9
PMDAT_8
PMDAT_7
PMDAT_6
PMDAT_5
PMDAT_4
PMDAT_3
PMDAT_2
PMDAT_1
PMDAT_0
PMADR_[22:0]
PMADR_22
PMADR_21
PMADR_20
PMADR_19
PMADR_18
PMADR_17
PMADR_16
PMADR_15
PMADR_14
PMADR_13
PMADR_12
PMADR_11
PMADR_10
PMADR_9
PMADR_8
PMADR_7
PMADR_6
PMADR_5
PMADR_4
PMADR_3
PMADR_2
PMADR_1
PMADR_0
PM_BLSZ_1
PM_BLSZ_0
PM_WEZ
PM_OEZ
PM_CSZ_0
PM_CSZ_1
PM_CSZ_2
R529 RES
R530 RES
U64
7B29640219
VCC
VSS
P3P3V
P3P3V 10,11,12,14,15,16,17
GND 3,4,5,6,7,8,10,11,12,13,14,15,16,17
C597 CAP_NP
C598 CAP_NP
DQ15/A-1
DQ14
DQ13
DQ12
DQ11
DQ10
DQ9
DQ8
DQ7
DQ6
DQ5
DQ4
DQ3
DQ2
DQ1
DQ0
BUSY
R532 RES
FLASH_RSTZ
R531 RES
PM_WESZ
PM_OESZ
FLASH_CSSZ
R533 RES
R534 RES
R535 RES
R536 RES
64MB FLASH
7B29064B39 for MW814ST
7B29640A39 for MARS11-6
10,14 POSENSE
R539 RES
U4A
Front End Interface
7A0442200J
4,6 GBE[9:0]
4,6 GGE[9:0]
4,6 GRE[9:0]
B
G
R
4 P1_CLK
6 P2_CLK
4 P1_HSYNC
6 P2_HSYNC
4 P1_VSYNC
6 P2_VSYNC
6 P2_DATEN
TP51
P2_FIELD
6 HDMI_INT
0201 HV SWAP
4 ALF_HSYNC
4 ALF_VSYNC
4 ALF_CSYNC
4 AFE_RSTZ
4 EXT_CLK
EXT_CLK:108MHz
R538 RES
C599 CAP_NP
BOM

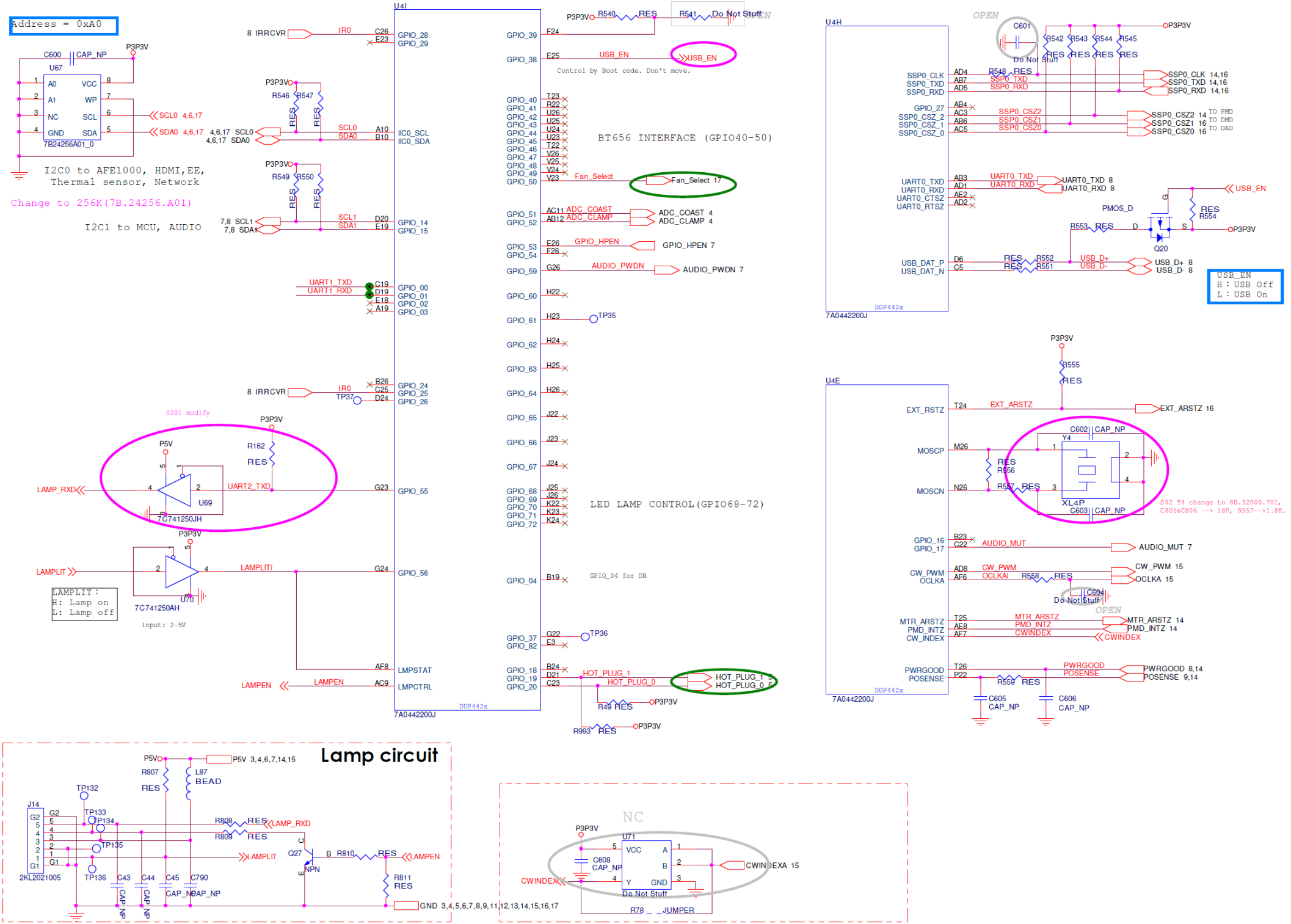

Address = 0xA0
U67
7B24256A01_0
I2C0 to AFE1000, HDMI,EE, Thermal sensor, Network
Change to 256K(7B.24256.A01)
I2C1 to MCU, AUDIO
U4I
7A0442200J
DDP442x
BT656 INTERFACE (GPIO40-50)
Control by Boot code. Don't move.
LED LAMP CONTROL(GPIO68-72)
GPIO_04 for DB
0201 modify
U69
7C741250JH
U70
7C741250AH
LAMPLIT :
H: Lamp on
L: Lamp off
input: 2-5V
U4H
7A0442200J
DDP442x
USB_EN
H : USB Off
L : USB On
U4E
7A0442200J
DDP442x
S02 Y4 change to 8B.32000.701, C805&C806 --> 18P, R557-->1.8K.
Lamp circuit
J14
2KL2021005
NC
U71
Do Not Stuff

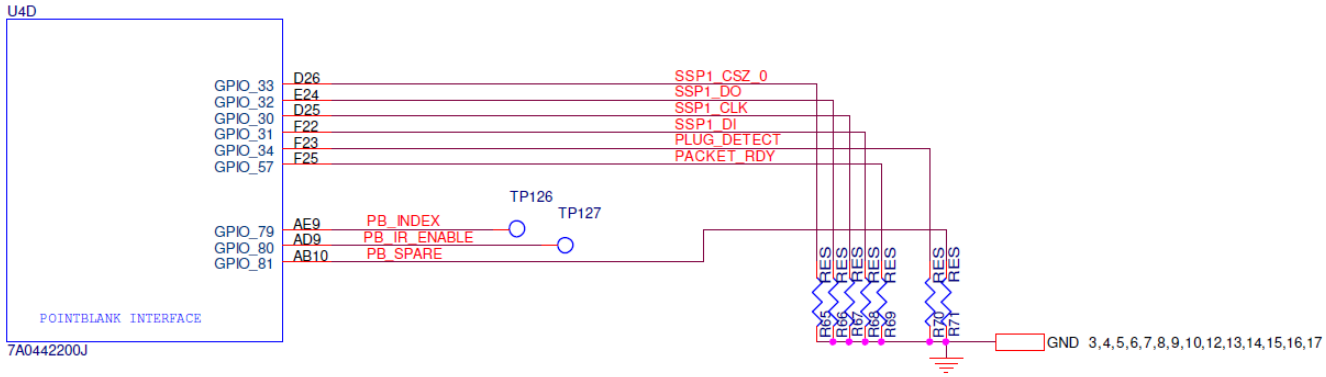

Connector for Radio Transceiver

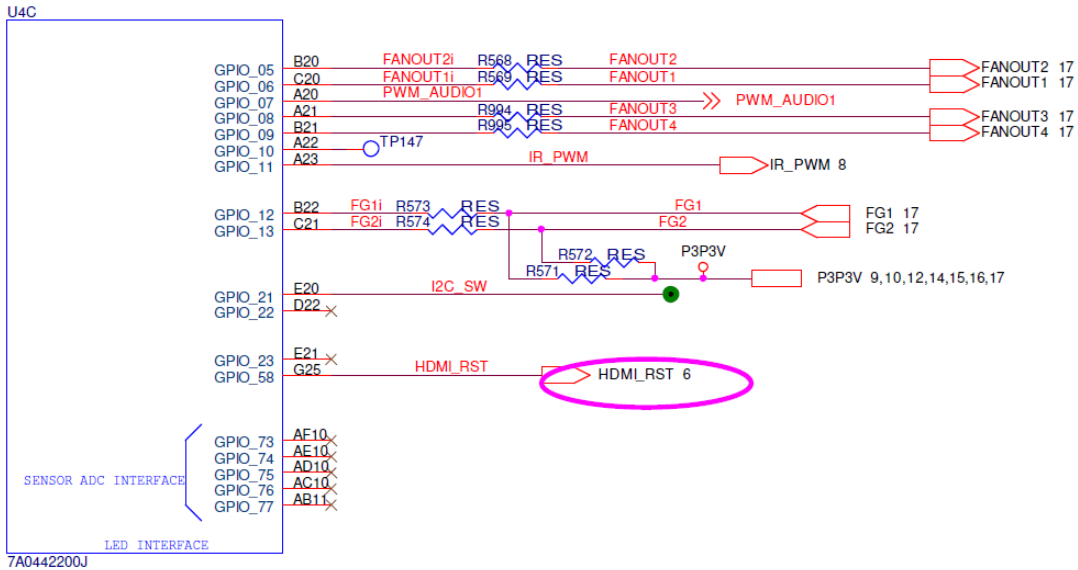

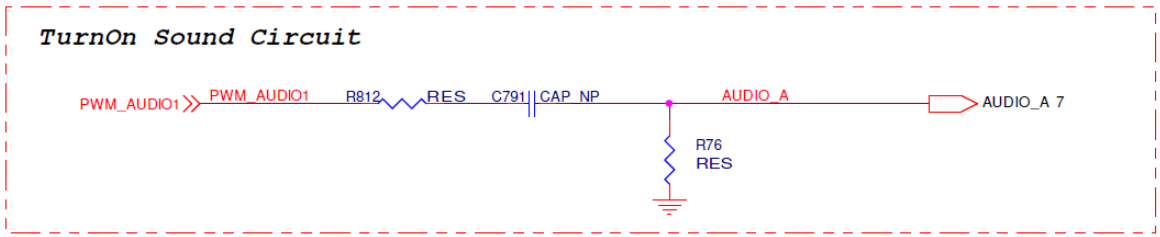

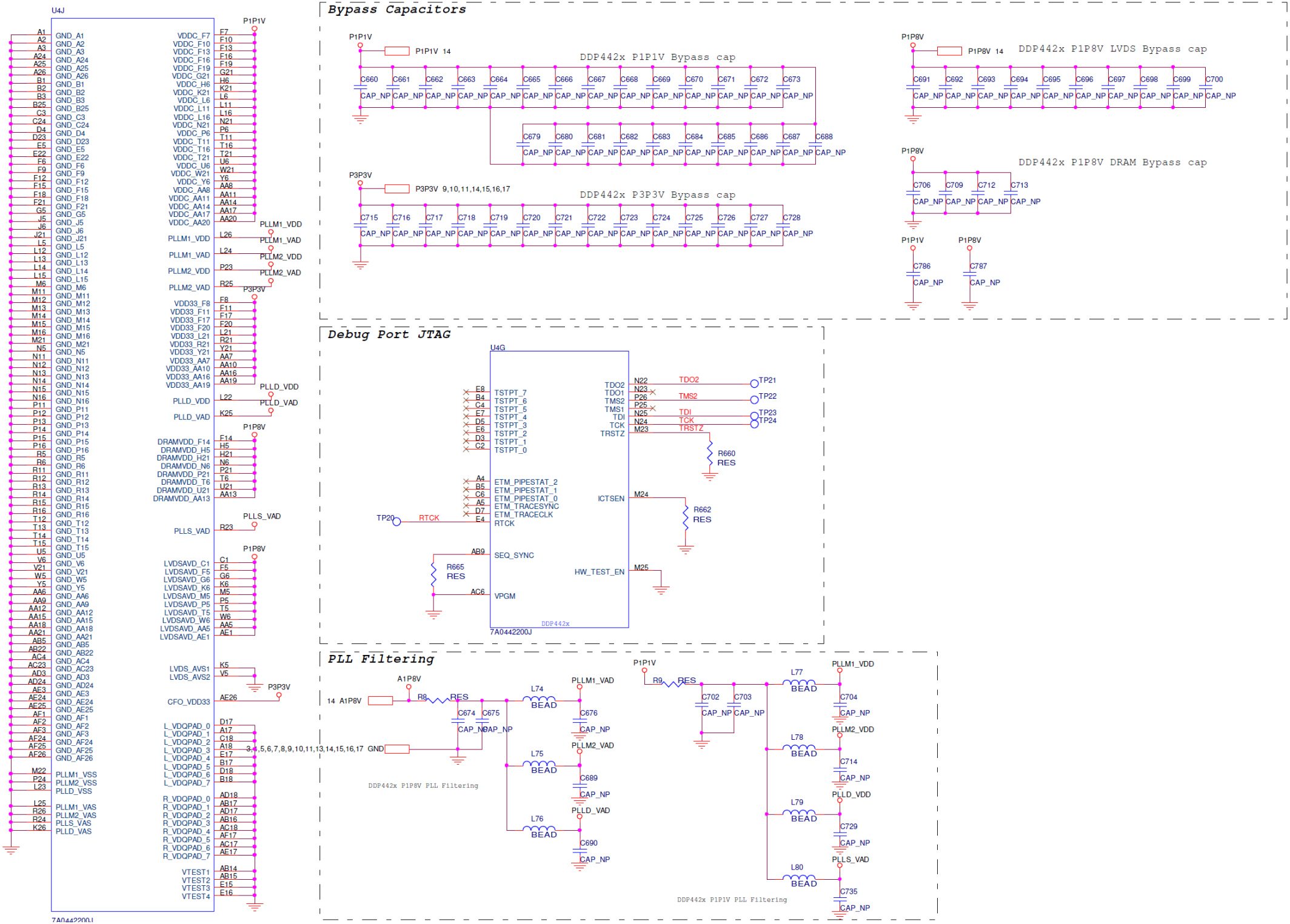
U4J
GND_A1
GND_A2
GND_A3
GND_A24
GND_A25
GND_A26
GND_B1
GND_B2
GND_B3
GND_B25
GND_C3
GND_C24
GND_D4
GND_D23
GND_E5
GND_E22
GND_F6
GND_F9
GND_F12
GND_F15
GND_F18
GND_F21
GND_G5
GND_J5
GND_J6
GND_J21
GND_L5
GND_L12
GND_L13
GND_L14
GND_L15
GND_M6
GND_M11
GND_M12
GND_M13
GND_M14
GND_M15
GND_M16
GND_M21
GND_N5
GND_N11
GND_N12
GND_N13
GND_N14
GND_N15
GND_N16
GND_P11
GND_P12
GND_P13
GND_P14
GND_P15
GND_P16
GND_R5
GND_R6
GND_R11
GND_R12
GND_R13
GND_R14
GND_R15
GND_R16
GND_T12
GND_T13
GND_T14
GND_T15
GND_U5
GND_V6
GND_V21
GND_W5
GND_Y5
GND_AA6
GND_AA9
GND_AA12
GND_AA15
GND_AA18
GND_AA21
GND_AB5
GND_AB22
GND_AC4
GND_AC23
GND_AD3
GND_AD24
GND_AE3
GND_AE24
GND_AE25
GND_AF1
GND_AF2
GND_AF3
GND_AF24
GND_AF25
GND_AF26
PLLM1_VSS
PLLM2_VSS
PLLD_VSS
PLLM1_VAS
PLLM2_VAS
PLLS_VAS
PLLD_VAS
P1P1V
VDDC_F7
VDDC_F10
VDDC_F13
VDDC_F16
VDDC_F19
VDDC_G21
VDDC_H6
VDDC_K21
VDDC_L6
VDDC_L11
VDDC_L16
VDDC_N21
VDDC_P6
VDDC_T11
VDDC_T16
VDDC_T21
VDDC_U6
VDDC_W21
VDDC_Y6
VDDC_AA8
VDDC_AA11
VDDC_AA14
VDDC_AA17
VDDC_AA20
PLLM1_VDD
PLLM1_VAD
PLLM2_VDD
PLLM2_VAD
P3P3V
VDD33_F8
VDD33_F11
VDD33_F17
VDD33_F20
VDD33_L21
VDD33_R21
VDD33_Y21
VDD33_AA7
VDD33_AA10
VDD33_AA16
VDD33_AA19
PLLD_VDD
PLLD_VAD
P1P8V
DRAMVDD_F14
DRAMVDD_H5
DRAMVDD_H21
DRAMVDD_N6
DRAMVDD_P21
DRAMVDD_T6
DRAMVDD_U21
DRAMVDD_AA13
PLLS_VAD
P1P8V
LVDSAVD_C1
LVDSAVD_F5
LVDSAVD_G6
LVDSAVD_K6
LVDSAVD_M5
LVDSAVD_P5
LVDSAVD_T5
LVDSAVD_W6
LVDSAVD_AA5
LVDSAVD_AE1
LVDS_AVS1
LVDS_AVS2
P3P3V
CFO_VDD33
L_VDQPAD_0
L_VDQPAD_1
L_VDQPAD_2
L_VDQPAD_3
L_VDQPAD_4
L_VDQPAD_5
L_VDQPAD_6
L_VDQPAD_7
R_VDQPAD_0
R_VDQPAD_1
R_VDQPAD_2
R_VDQPAD_3
R_VDQPAD_4
R_VDQPAD_5
R_VDQPAD_6
R_VDQPAD_7
VTEST1
VTEST2
VTEST3
VTEST4
7A0442200J
Bypass Capacitors
P1P1V
P1P1V 14
DDP442x P1P1V Bypass cap
C660 C661 C662 C663 C664 C665 C666 C667 C668 C669 C670 C671 C672 C673
C679 C680 C681 C682 C683 C684 C685 C686 C687 C688
CAP_NP
P3P3V
P3P3V 9,10,11,14,15,16,17
DDP442x P3P3V Bypass cap
C715 C716 C717 C718 C719 C720 C721 C722 C723 C724 C725 C726 C727 C728
P1P8V
P1P8V 14
DDP442x P1P8V LVDS Bypass cap
C691 C692 C693 C694 C695 C696 C697 C698 C699 C700
P1P8V
DDP442x P1P8V DRAM Bypass cap
C706 C709 C712 C713
P1P1V
P1P8V
C786
C787
Debug Port JTAG
U4G
TSTPT_7
TSTPT_6
TSTPT_5
TSTPT_4
TSTPT_3
TSTPT_2
TSTPT_1
TSTPT_0
TDO2
TDO1
TMS2
TMS1
TDI
TCK
TRSTZ
TP21
TP22
TP23
TP24
R660
RES
ETM_PIPESTAT_2
ETM_PIPESTAT_1
ETM_PIPESTAT_0
ETM_TRACESYNC
ETM_TRACECLK
RTCK
TP20
ICTSEN
R662
SEQ_SYNC
R665
HW_TEST_EN
VPGM
DDP442x
7A0442200J
PLL Filtering
A1P8V
14 A1P8V
R8
RES
C674
C675
CAP_NP
L74
L75
L76
BEAD
PLLM1_VAD
PLLM2_VAD
PLLD_VAD
C676
C689
C690
3,4,5,6,7,8,9,10,11,13,14,15,16,17 GND
DDP442x P1P8V PLL Filtering
P1P1V
R9
C702
C703
L77
L78
L79
L80
PLLM1_VDD
PLLM2_VDD
PLLD_VDD
PLLS_VAD
C704
C714
C729
C735
DDP442x P1P1V PLL Filtering

KeyPad & LED Circuit

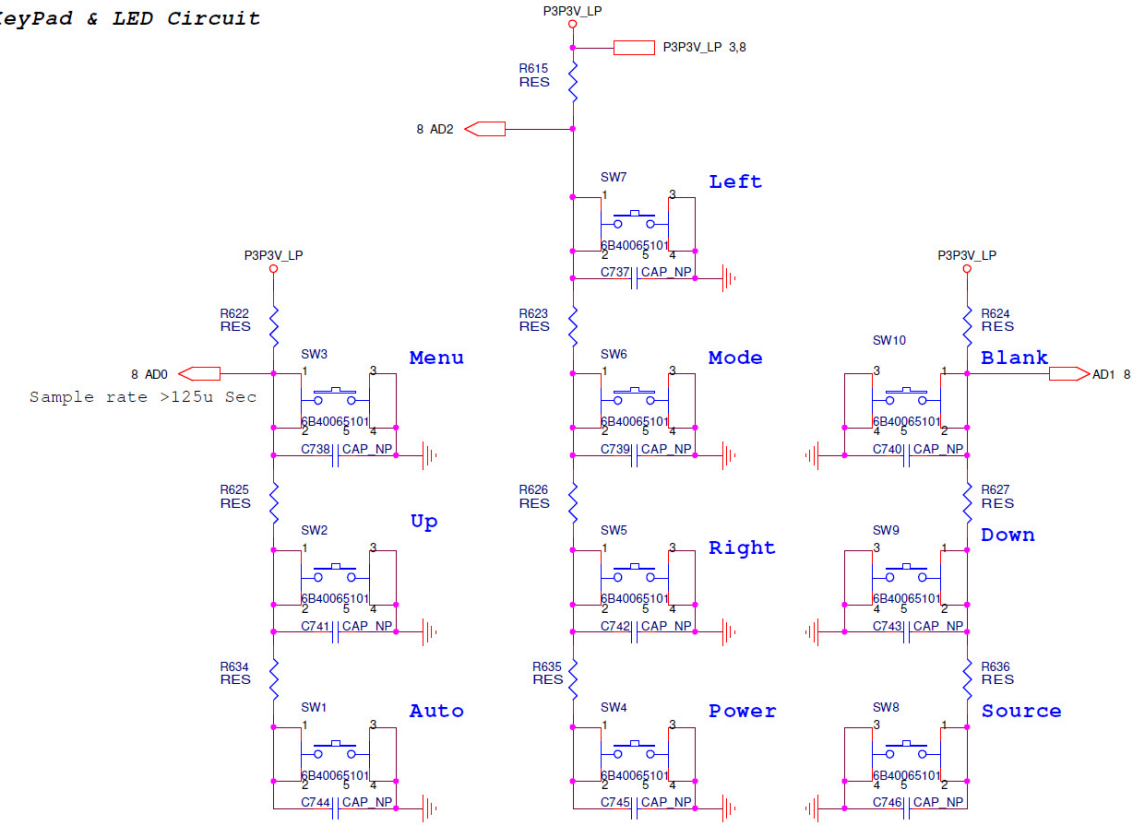

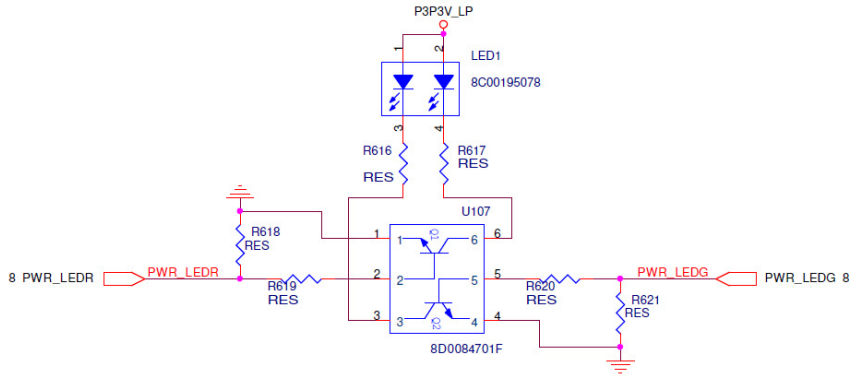

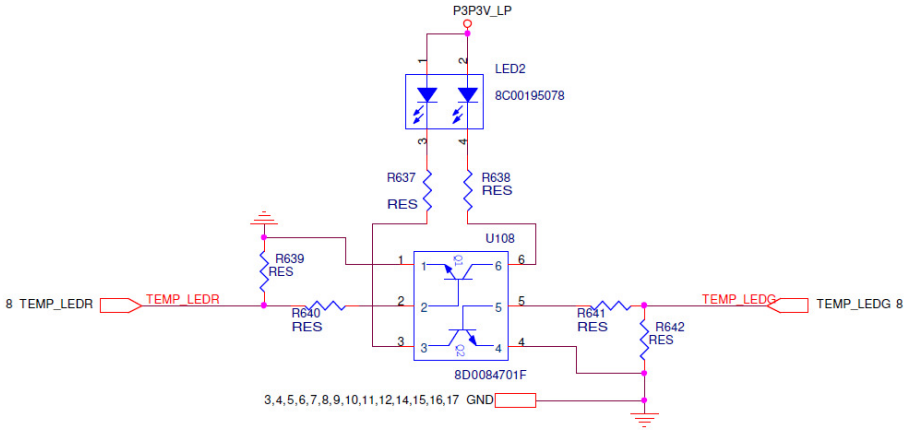

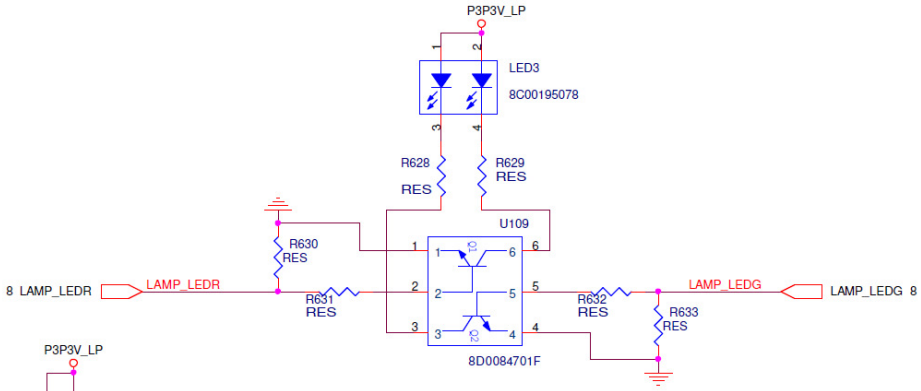

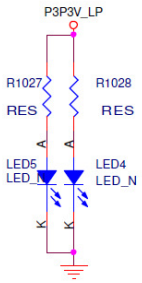

POWER KEY LED

A
0~3F Menu
40~7F Up
80~BF Auto
C0~FF Releas

B
0~1F Left
20~5F Mode
60~9F Right
A0~DF Power
E0~FF Releas

C
0~3F Blank
40~7F Down
80~BF Source
C0~FF Releas

Base on Full Scale is equal to Vcc

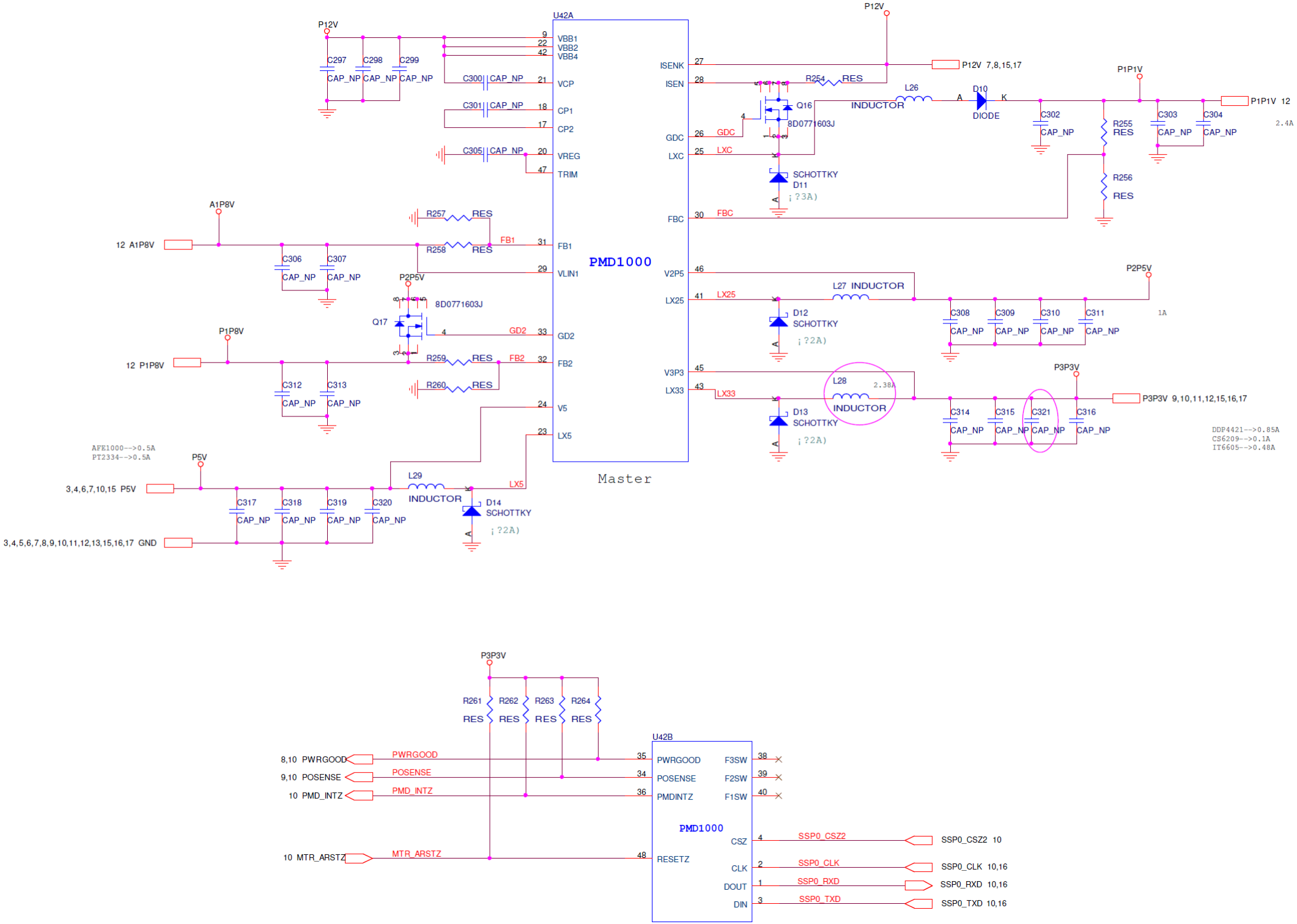
U42A
PMD1000
Master
P12V
P1P1V
P2P5V
P3P3V
A1P8V
P1P8V
P5V
C297 CAP_NP
C298 CAP_NP
C299 CAP_NP
C300 CAP_NP
C301 CAP_NP
C305 CAP_NP
VBB1
VBB2
VBB4
VCP
CP1
CP2
VREG
TRIM
R257 RES
R258 RES
FB1
VLIN1
C306 CAP_NP
C307 CAP_NP
8D0771603J
Q17
GD2
R259 RES
R260 RES
FB2
C312 CAP_NP
C313 CAP_NP
V5
LX5
L29 INDUCTOR
D14 SCHOTTKY
C317 CAP_NP
C318 CAP_NP
C319 CAP_NP
C320 CAP_NP
AFE1000-->0.5A
PT2334-->0.5A
12 A1P8V
12 P1P8V
3,4,6,7,10,15 P5V
3,4,5,6,7,8,9,10,11,12,13,15,16,17 GND
ISENK
ISEN
GDC
LXC
FBC
R254 RES
Q16
8D0771603J
L26 INDUCTOR
D10 DIODE
C302 CAP_NP
R255 RES
R256 RES
C303 CAP_NP
C304 CAP_NP
P1P1V 12
2.4A
SCHOTTKY D11
P12V 7,8,15,17
V2P5
LX25
V3P3
LX33
L27 INDUCTOR
D12 SCHOTTKY
L28 INDUCTOR
2.38A
D13 SCHOTTKY
C308 CAP_NP
C309 CAP_NP
C310 CAP_NP
C311 CAP_NP
1A
C314 CAP_NP
C315 CAP_NP
C321 CAP_NP
C316 CAP_NP
P3P3V 9,10,11,12,15,16,17
DDP4421-->0.85A
CS6209-->0.1A
IT6605-->0.48A
R261 RES
R262 RES
R263 RES
R264 RES
U42B
PMD1000
8,10 PWRGOOD
9,10 POSENSE
10 PMD_INTZ
10 MTR_ARSTZ
PWRGOOD
POSENSE
PMD_INTZ
MTR_ARSTZ
F3SW
F2SW
F1SW
CSZ
CLK
DOUT
DIN
RESETZ
SSP0_CSZ2
SSP0_CLK
SSP0_RXD
SSP0_TXD
SSP0_CSZ2 10
SSP0_CLK 10,16
SSP0_RXD 10,16
SSP0_TXD 10,16

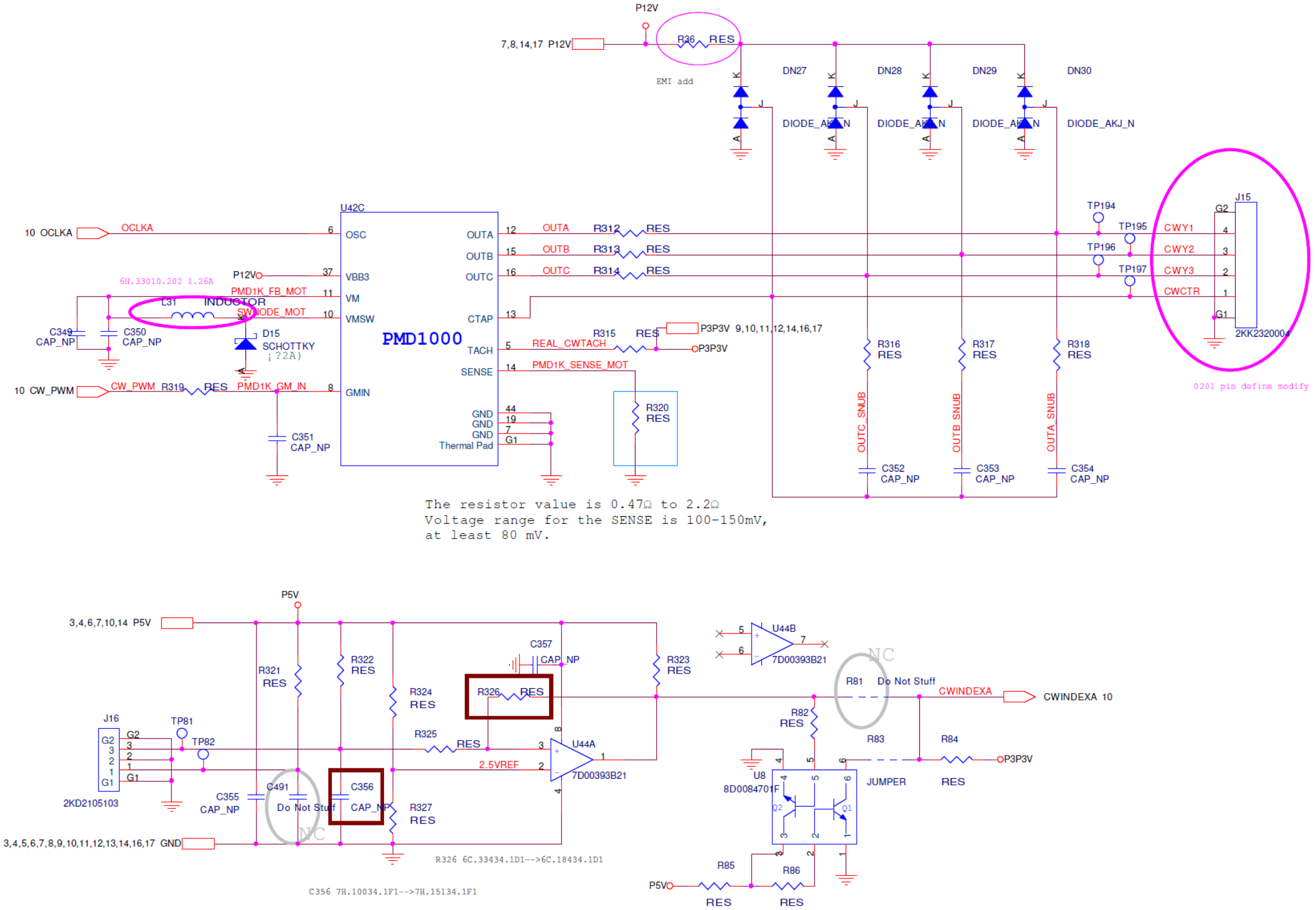
P12V
7,8,14,17 P12V
R36 RES
EMI add
DN27
DN28
DN29
DN30
DIODE_AKJ_N
U42C
PMD1000
10 OCLKA
OCLKA
OSC
6H.33010.202 1.26A
P12VO
VBB3
PMD1K_FB_MOT
VM
L31 INDUCTOR
SWNODE_MOT
VMSW
C349 CAP_NP
C350 CAP_NP
D15 SCHOTTKY
10 CW_PWM
CW_PWM R319 RES
PMD1K_GM_IN
GMIN
C351 CAP_NP
OUTA
OUTB
OUTC
CTAP
TACH
SENSE
GND
Thermal Pad
R312 RES
R313 RES
R314 RES
R315 RES
P3P3V 9,10,11,12,14,16,17
P3P3V
REAL_CWTACH
PMD1K_SENSE_MOT
R320 RES
R316 RES
R317 RES
R318 RES
OUTC_SNUB
OUTB_SNUB
OUTA_SNUB
C352 CAP_NP
C353 CAP_NP
C354 CAP_NP
TP194
TP195
TP196
TP197
J15
CWY1
CWY2
CWY3
CWCTR
2KK2320004
0201 pin define modify
The resistor value is 0.47Ω to 2.2Ω
Voltage range for the SENSE is 100-150mV,
at least 80 mV.
P5V
3,4,6,7,10,14 P5V
R321 RES
R322 RES
R323 RES
R324 RES
R325 RES
R326 RES
C357 CAP_NP
U44A
U44B
7D00393B21
2.5VREF
J16
TP81
TP82
2KD2105103
C355 CAP_NP
C491 Do Not Stuff
C356 CAP_NP
R327 RES
3,4,5,6,7,8,9,10,11,12,13,14,16,17 GND
R326 6C.33434.1D1-->6C.18434.1D1
C356 7H.10034.1F1-->7H.15134.1F1
NC
R81 Do Not Stuff
CWINDEXA
CWINDEXA 10
R82 RES
R83
R84
JUMPER
RES
P3P3V
U8
8D0084701F
Q1
Q2
R85 RES
R86 RES
P5VO

Swap Ch:A with Ch:B
Half bus port with bus data bit order swap

U4B

DMD_P3P3V:RMS=1A, PK=1.4A

P3P3V

L132 BEAD

9,10,11,12,14,15,17 P3P3V

DMD_P3P3V_A

C1031 CAP_NP

C1032 CAP_NP

J4

2KC1005120

DDB_P_15	N1	DDAP15	
DDB_N_15	N2	DDAN15	
DDB_P_14	N3	DDAP14	
DDB_N_14	N4	DDAN14	
DDB_P_13	M2	DDAP13	
DDB_N_13	M1	DDAN13	
DDB_P_12	M3	DDAP12	
DDB_N_12	M4	DDAN12	
DDB_P_11	L1	DDAP11	
DDB_N_11	L2	DDAN11	
DDB_P_10	L3	DDAP10	
DDB_N_10	L4	DDAN10	
DDB_P_9	K1	DDAP9	
DDB_N_9	K2	DDAN9	
DDB_P_8	K3	DDAP8	
DDB_N_8	K4	DDAN8	
DDB_P_7	H1	DDAP7	
DDB_N_7	H2	DDAN7	
DDB_P_6	H3	DDAP6	
DDB_N_6	H4	DDAN6	
DDB_P_5	G1	DDAP5	
DDB_N_5	G2	DDAN5	
DDB_P_4	G3	DDAP4	
DDB_N_4	G4	DDAN4	
DDB_P_3	F1	DDAP3	
DDB_N_3	F2	DDAN3	
DDB_P_2	F3	DDAP2	
DDB_N_2	F4	DDAN2	
DDB_P_1	E1	DDAP1	
DDB_N_1	E2	DDAN1	
DDB_P_0	D1	DDAP0	
DDB_N_0	D2	DDAN0	

DDA_P_15	P4	DDBP15	
DDA_N_15	P3	DDBN15	
DDA_P_14	P2	DDBP14	
DDA_N_14	P1	DDBN14	
DDA_P_13	R4	DDBP13	
DDA_N_13	R3	DDBN13	
DDA_P_12	R2	DDBP12	
DDA_N_12	R1	DDBN12	
DDA_P_11	T4	DDBP11	
DDA_N_11	T3	DDBN11	
DDA_P_10	T2	DDBP10	
DDA_N_10	T1	DDBN10	
DDA_P_9	U4	DDBP9	
DDA_N_9	U3	DDBN9	
DDA_P_8	U2	DDBP8	
DDA_N_8	U1	DDBN8	
DDA_P_7	W4	DDBP7	
DDA_N_7	W3	DDBN7	
DDA_P_6	W2	DDBP6	
DDA_N_6	W1	DDBN6	
DDA_P_5	Y2	DDBP5	
DDA_N_5	Y1	DDBN5	
DDA_P_4	Y4	DDBP4	
DDA_N_4	Y3	DDBN4	
DDA_P_3	AA2	DDBP3	
DDA_N_3	AA1	DDBN3	
DDA_P_2	AA4	DDBP2	
DDA_N_2	AA3	DDBN2	
DDA_P_1	AB2	DDBP1	
DDA_N_1	AB1	DDBN1	
DDA_P_0	AC2	DDBP0	
DDA_N_0	AC1	DDBN0	

DCKB_P	J3	DCLKAP	DCLKAP
DCKB_N	J4	DCLKAN	DCLKAN
DCKA_P	V4	DCLKBP	DCLKBP
DCKA_N	V3	DCLKBN	DCLKBN
SCB_P	J1	SCTRLAP	SCTRLAP
SCB_N	J2	SCTRLAN	SCTRLAN
SCA_P	V2	SCTRLBP	SCTRLBP
SCA_N	V1	SCTRLBN	SCTRLBN

P3P3V

P3P3V 9,10,11,12,14,15,17

R1005 RES

R1006 RES

DADADDR_0	AB8	DAD_ADDR0	DAD_ADDR0
DADADDR_1	AF4	DAD_ADDR1	DAD_ADDR1
DADADDR_2	AE5	DAD_ADDR2	DAD_ADDR2
DADADDR_3	AD6	DAD_ADDR3	DAD_ADDR3
DADMODE_0	AE6	DAD_MODE_0	DAD_MODE_0
DADMODE_1	AD7	DAD_MODE_1	DAD_MODE_1
DADSEL_0	AC7	DAD_SEL_0	DAD_SEL_0
DADSEL_1	AE4	DAD_SEL_1	DAD_SEL_1
DADSTRB	AF5	DAD_STRB	DAD_STRB
DADOEZ	AE7	DAD_OEZ	DAD_OEZ
DAD_INTZ	AC8	DAD_INTZ	DAD_INTZ

DMD_INTERFACE

7A0442200J

DDAN0	8	7	DDAN2
DDAP0	10	9	DDAP2
DDAN1	12	11	DDAN4
DDAP1	14	13	DDAP4
DDAN3	16	15	
DDAP3	18	17	DDAN6
DDAN5	20	19	DDAP6
DDAP5	22	21	DCLKAN
	24	23	DCLKAP
DDAN7	26	25	
DDAP7	28	27	DDAN8
SCTRLAN	30	29	DDAP8
SCTRLAP	32	31	DDAN10
	34	33	DDAP10
DDAN9	36	35	
DDAP9	38	37	DDAN12
DDAN11	40	39	DDAP12
DDAP11	42	41	DDAN14
	44	43	DDAP14
DDAN13	46	45	
DDAP13	48	47	DDBP15
DDAN15	50	49	DDBN15
DDAP15	52	51	DDBP13
	54	53	DDBN13
DDBP14	56	55	
DDBN14	58	57	DDBP11
DDBP12	60	59	DDBN11
DDBN12	62	61	DDBP9
	64	63	DDBN9
DDBP3	66	65	
DDBN3	68	67	DCLKBP
DDBP5	70	69	DCLKBN
DDBN5	72	71	DDBP7
	74	73	DDBN7
DDBP4	76	75	
DDBN4	78	77	DDBP10
DDBP2	80	79	DDBN10
DDBN2	82	81	DDBP8
	84	83	DDBN8
DDBP1	86	85	
DDBN1	88	87	SCTRLBP
DDBP0	90	89	SCTRLBN
DDBN0	92	91	DDBP6
	94	93	DDBN6
DAD_MODE_0	96	95	
DAD_MODE_1	98	97	RES R996 DAD_ADDR0
DAD_SEL_0	100	99	RES R997 DAD_ADDR1
DAD_SEL_1	102	101	RES R998 DAD_ADDR2
	104	103	RES R999 DAD_ADDR3
	106	105	
SSP0_CLK_DMD	108	107	RES R1000 DAD_OEZ
SSP0_TXD_DMD	110	109	DAD_STRB
SSP0_RXD_DMD	112	111	DAD_INTZ
SSP0_CSZ1_DMD	114	113	EXT_ARSTZ EXT_ARSTZ 10
SSP0_CSZ0_DAD	116	115	
	118	117	DMD_P3P3V_B
GND	120	119	

10,14 SSP0_CLK R1001 RES

10,14 SSP0_TXD R1002 RES

10,14 SSP0_RXD R1003 RES

10 SSP0_CSZ1 R1004 RES

10 SSP0_CSZ0

3,4,5,6,7,8,9,10,11,12,13,14,15,17 GND

L133 BEAD

P3P3V

C1033 CAP_NP

C1034 CAP_NP

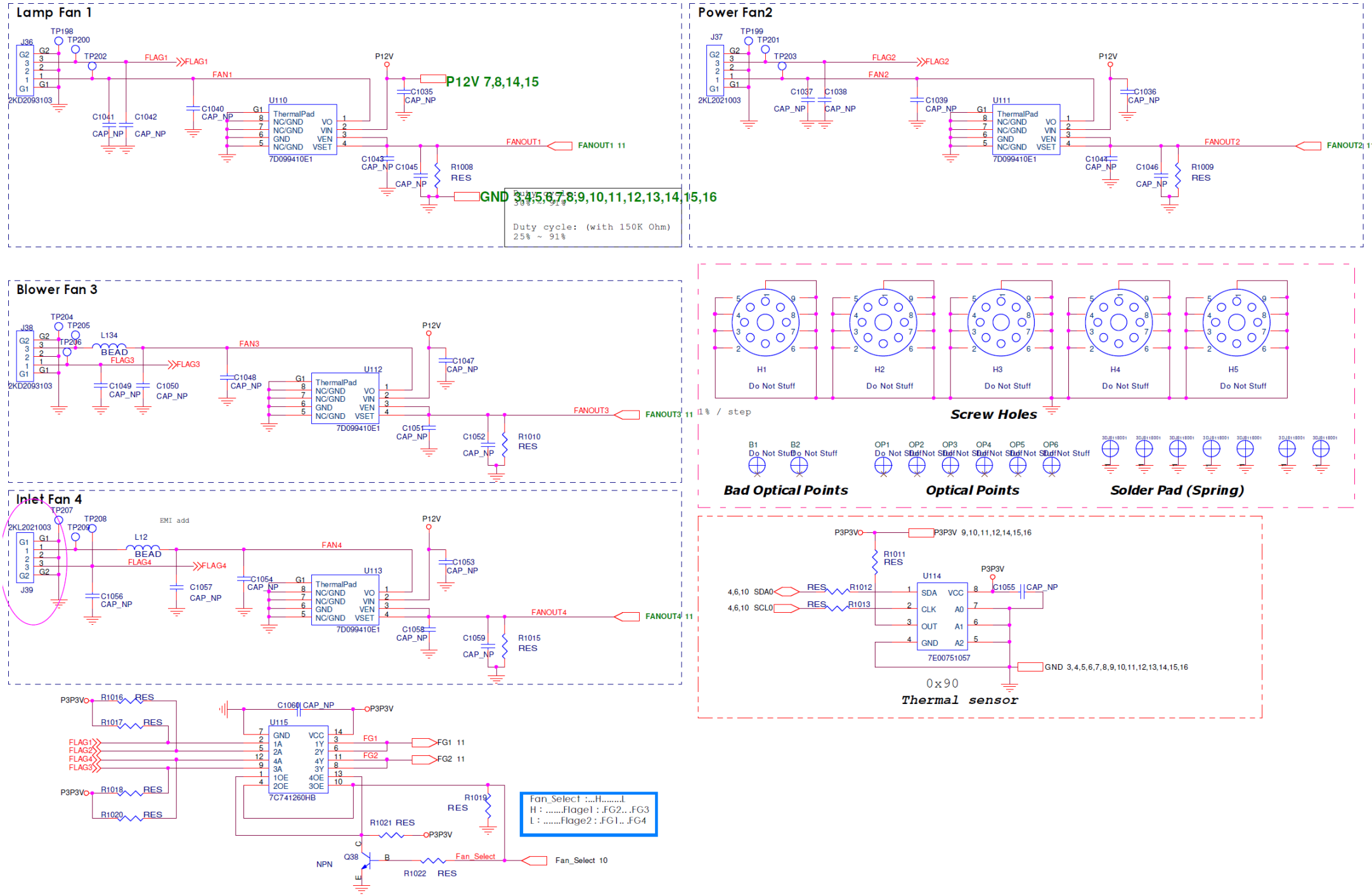
Lamp Fan 1
TP198
TP200
TP202
J36
2KD2093103
FLAG1
FAN1
C1041
C1042
C1040
U110
ThermalPad
NC/GND
NC/GND
GND
NC/GND
VO
VIN
VEN
VSET
7D099410E1
P12V
C1035
CAP_NP
P12V 7,8,14,15
C1043
C1045
R1008
RES
FANOUT1
FANOUT1 11
GND 3,4,5,6,7,8,9,10,11,12,13,14,15,16
Duty cycle: (with 150K Ohm)
25% ~ 91%
Power Fan2
TP199
TP201
TP203
J37
2KL2021003
FLAG2
FAN2
C1037
C1038
C1039
U111
C1036
C1044
C1046
R1009
FANOUT2
FANOUT2 11
Blower Fan 3
TP204
TP205
TP206
J38
2KD2093103
L134
BEAD
FLAG3
FAN3
C1049
C1050
C1048
U112
C1047
C1051
C1052
R1010
FANOUT3
FANOUT3 11
1% / step
Inlet Fan 4
TP207
TP208
TP209
J39
2KL2021003
EMI add
L12
FLAG4
FAN4
C1056
C1057
C1054
U113
C1053
C1058
C1059
R1015
FANOUT4
FANOUT4 11
H1
H2
H3
H4
H5
Do Not Stuff
Screw Holes
B1
B2
Bad Optical Points
OP1
OP2
OP3
OP4
OP5
OP6
Optical Points
Solder Pad (Spring)
P3P3V
P3P3V 9,10,11,12,14,15,16
R1011
RES
U114
R1012
R1013
4,6,10 SDA0
4,6,10 SCL0
SDA
SCL
VCC
A0
A1
A2
C1055
7E00751057
GND 3,4,5,6,7,8,9,10,11,12,13,14,15,16
0x90
Thermal sensor
R1016
R1017
R1018
R1020
C1060
U115
7C741260HB
FG1
FG2
FG1 11
FG2 11
R1019
R1021
R1022
Q38
NPN
Fan_Select
Fan_Select 10
Fan_Select :...H.....L
H : .....Flage1 : .FG2.. .FG3
L : .....Flage2 : .FG1.. .FG4

Power board:

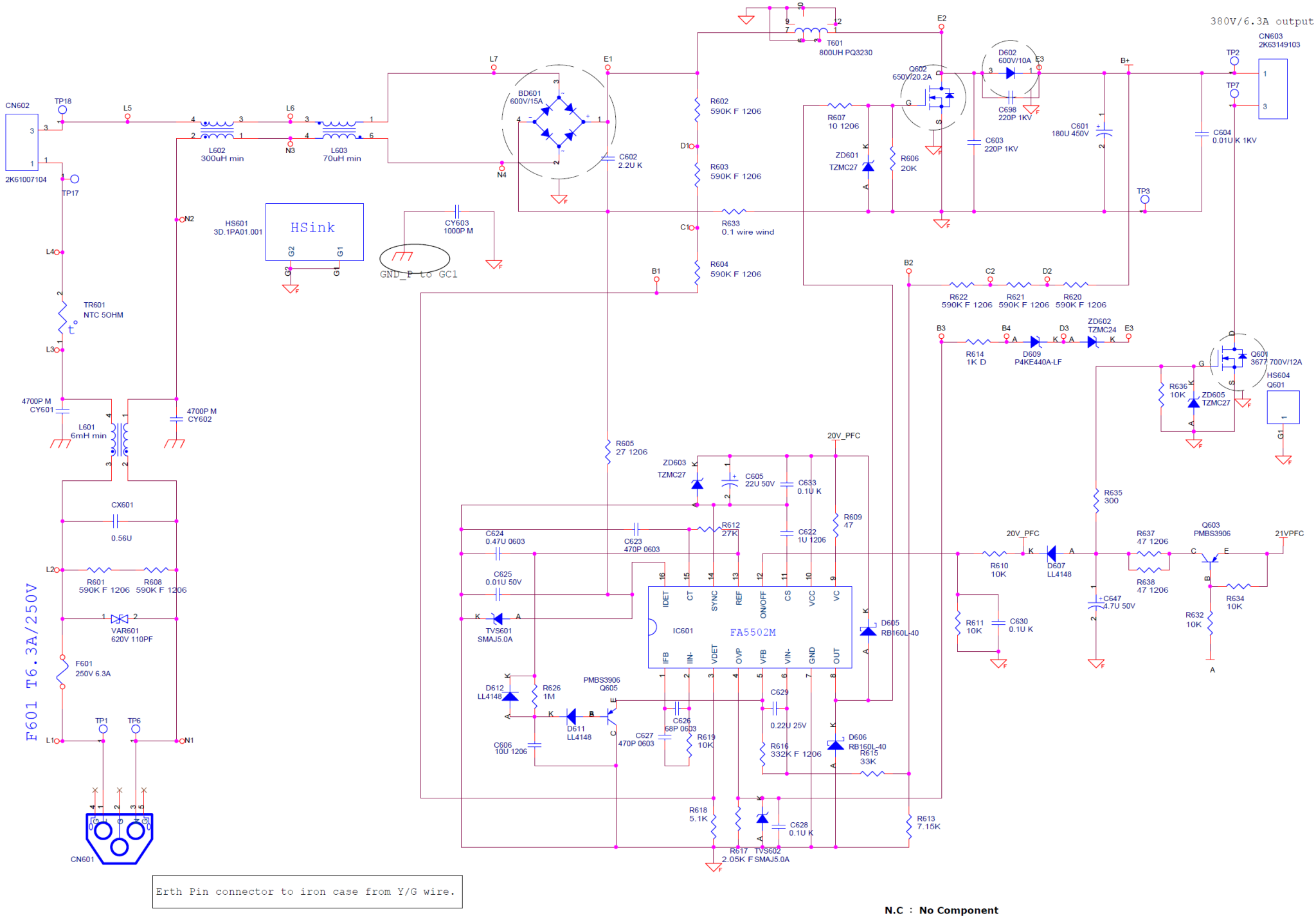

Erth Pin connector to iron case from Y/G wire.

N.C : No Component

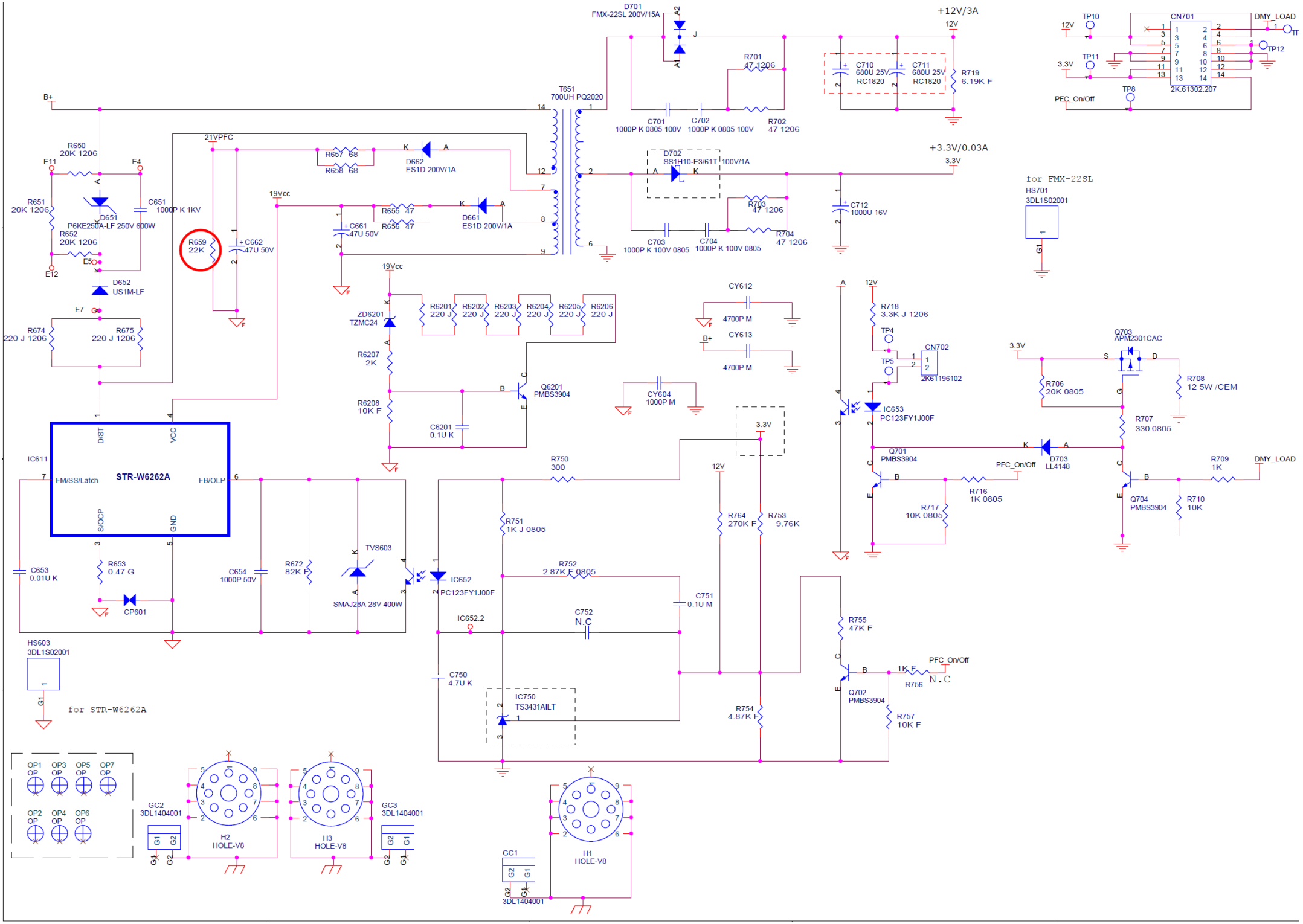
D701
FMX-22SL 200V/15A
+12V/3A
12V
R701
47 1206
C710
680U 25V
RC1820
C711
680U 25V
RC1820
R719
6.19K F
TP10
12V
TP11
3.3V
TP8
PFC_On/Off
CN701
2K.61302.207
DMY_LOAD
TF
TP12
B+
T651
700UH PQ2020
C701
1000P K 0805 100V
C702
1000P K 0805 100V
R702
47 1206
+3.3V/0.03A
3.3V
D702
SS1H10-E3/61T
100V/1A
R703
47 1206
R704
47 1206
C703
1000P K 100V 0805
C704
1000P K 100V 0805
C712
1000U 16V
for FMX-22SL
HS701
3DL1S02001
R650
20K 1206
R651
20K 1206
R652
20K 1206
D651
P6KE250A-LF 250V 600W
C651
1000P K 1KV
D652
US1M-LF
R674
220 J 1206
R675
220 J 1206
21VPFC
R659
22K
C662
47U 50V
R657 68
R658 68
D662
ES1D 200V/1A
19Vcc
C661
47U 50V
R655 47
R656 47
D661
ES1D 200V/1A
ZD6201
TZMC24
R6201
220 J
R6202
220 J
R6203
220 J
R6204
220 J
R6205
220 J
R6206
220 J
R6207
2K
R6208
10K F
C6201
0.1U K
Q6201
PMBS3904
CY612
4700P M
CY613
4700P M
CY604
1000P M
IC611
STR-W6262A
D/ST
VCC
FM/SS/Latch
FB/OLP
S/OCP
GND
C653
0.01U K
R653
0.47 G
CP601
C654
1000P 50V
R672
82K F
TVS603
SMAJ28A 28V 400W
IC652
PC123FY1J00F
IC652.2
R750
300
R751
1K J 0805
R752
2.87K F 0805
C752
N.C
C751
0.1U M
R764
270K F
R753
9.76K
R755
47K F
R754
4.87K F
IC750
TS3431AILT
C750
4.7U K
R757
10K F
Q702
PMBS3904
R756
1K F
N.C
PFC_On/Off
HS603
3DL1S02001
for STR-W6262A
R718
3.3K J 1206
TP4
TP5
CN702
2K61196102
IC653
PC123FY1J00F
Q701
PMBS3904
R716
1K 0805
R717
10K 0805
D703
LL4148
PFC_On/Off
Q703
APM2301CAC
R706
20K 0805
R708
12 5W /CEM
R707
330 0805
R709
1K
DMY_LOAD
Q704
PMBS3904
R710
10K
OP1 OP
OP3 OP
OP5 OP
OP7 OP
OP2 OP
OP4 OP
OP6 OP
GC2
3DL1404001
H2
HOLE-V8
H3
HOLE-V8
GC3
3DL1404001
GC1
3DL1404001
H1
HOLE-V8

PCB Artwork: Main Board

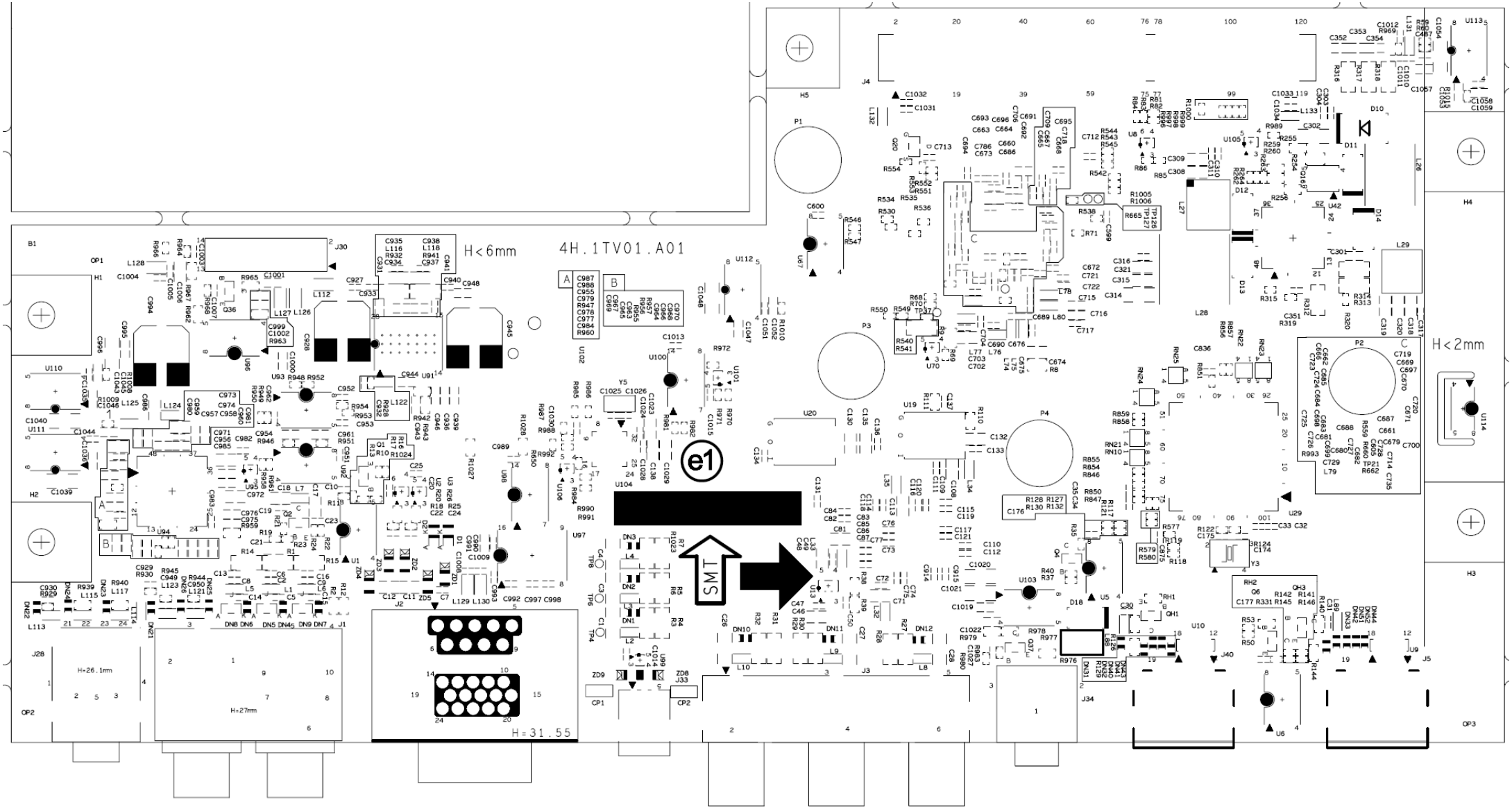

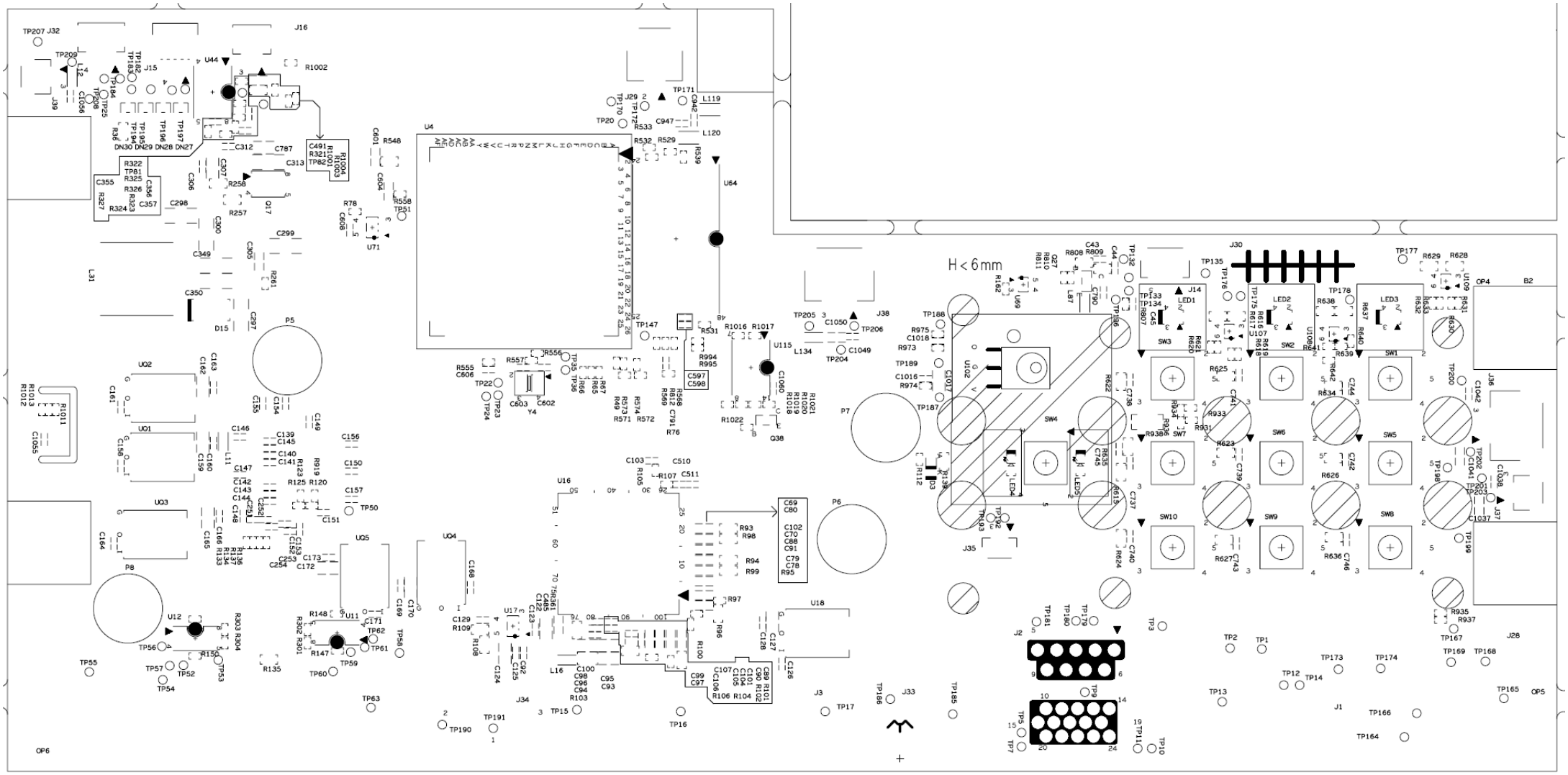
H<6mm

Power Board

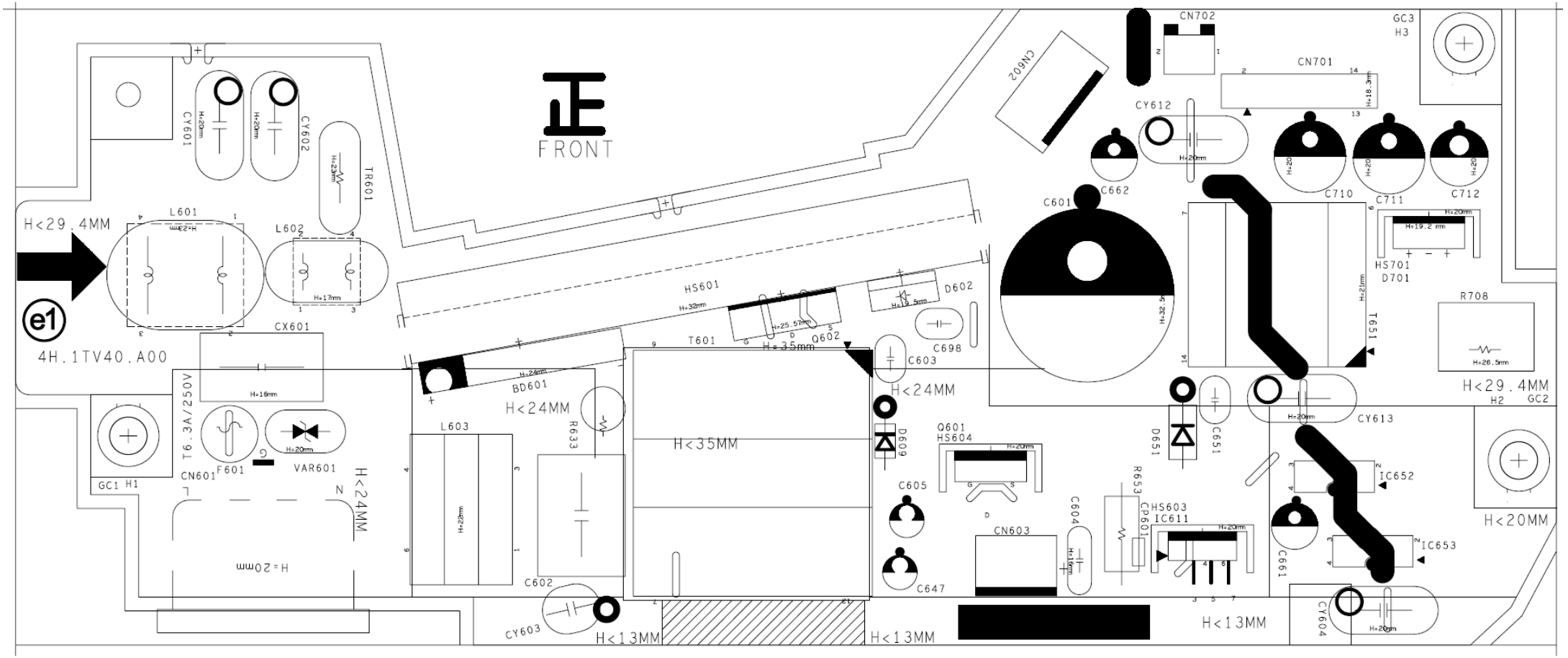

FRONT
H<29.4MM
4H.1TV40.A00
e1
CY601
CY602
TR601
L601
L602
CX601
T6.3A/250V
F601
VAR601
CN601
GC1 H1
H<24MM
H=20mm
L603
R633
BD601
H<24MM
HS601
T601
H=35mm
Q602
D602
C698
C603
H<24MM
H<35MM
D609
Q601
HS604
C605
C647
C602
CY603
H<13MM
H<13MM
CN602
CN702
CN701
CY612
C662
C601
C710
C711
C712
HS701
D701
R708
T651
H<29.4MM
H2 GC2
CY613
D651
C651
IC652
IC653
H<20MM
R653
CP601
HS603
IC611
C604
CN603
C661
CY604
H<13MM
GC3
H3

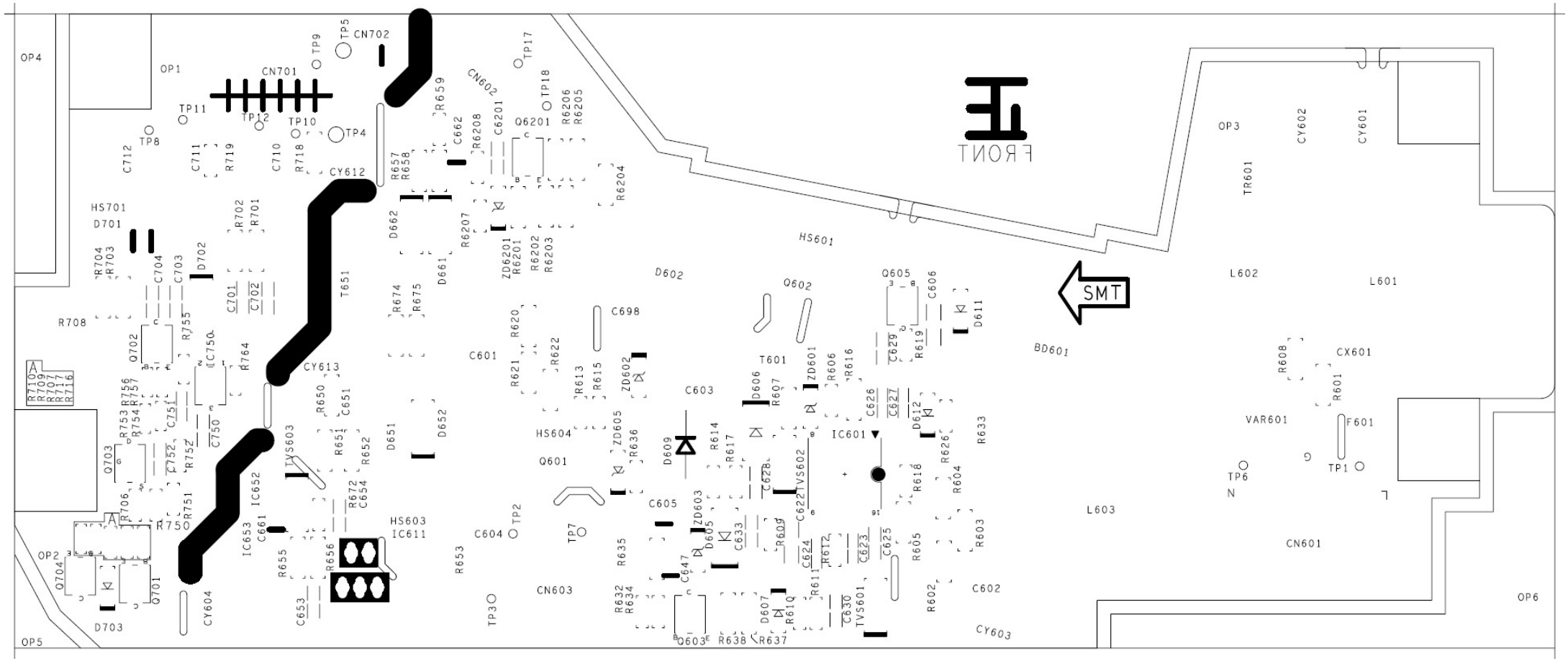

FRONT
SMT
OP1
OP2
OP3
OP4
OP5
OP6
CN701
CN702
CN601
CN602
CN603
HS601
HS603
HS604
HS701
IC601
IC611
IC652
IC653
Q601
Q602
Q603
Q605
Q6201
Q701
Q702
Q703
Q704
T601
T651
TR601
VAR601
CX601
F601
BD601
L601
L602
L603
CY601
CY602
CY603
CY604
CY612
CY613
TP1
TP2
TP3
TP4
TP5
TP6
TP7
TP8
TP9
TP10
TP11
TP12
TP17
TP18