DAEWOO

S/M No : FRXY601201

Service Manual

Refrigerator

MODEL NO.

FRS-X22B..
FRN-X22B..

FRS-X22D(E)..
FRN-X22D(E)..

FRS-X22F(G)..
FRN-X22F(G)..

✔ Caution

In this manual, some parts can be changed for improving their performance without notice. So, If you need the latest parts information, please visit and refer to PPL (Parts Price List)] in Service Infromation Center. (http://svc.dwe.co.kr)

JUNE. 2010.

Downloaded from www.Manualslib.com manuals search engine

CONTENTS

1. Safety Warnings & Cautions ---------- 2
2. Product Specifications---------- 5
3. Wiring Diagram---------- 7
4. Outside Dimensions & Parts Name---------- 9
5. Refrigeration Cycle---------- 13
6. Functions & Operating Methods of Refrigerator---------- 14
7. MICOM Circuit Explanation---------- 39
8. Troubleshooting & Repairing Methods---------- 47
9. How to take action against Unsatisfied Quality of Sensitivity ------- 74
10. Assemble/Disassemble Procedures for each Parts---------- 77
11. Installation Methods of Refrigerator---------- 94
12. Pop-up Drawings & Parts List of SVC ----------104

Downloaded from www.Manualslib.com manuals search engine

1. Safety Warning & Cautions

For your safety, please certainly keep followings

◆ Please read [Caution for Safety] before using refrigerator and operates it correctly.

⚠ Warning	It contains contents of possibility of severe damage to human body such as dead or heavy injury etc when does not follow instructions.	⚠ Caution	It contains contents of possibility of light or light-heavy damage to human body or damage to material when does not follow instructions.

◆ Example of marking

	It means prohibition of disassembly.		This marks means [Prohibition] or [Do not attempt to try].
	It means certainly disconnect electric source plug from socket.		This mark means [Mandatory] or [Certainly keep Instructions]

⚠ Warning

	Do not install refrigerator at wet area or humid environment. ◇ It cause of electric shock or fire accident by weakening electrical insulation.		When throw away refrigerator, certainly remove packing of door. ◇ Children may be trapped and suffocated. It is dangerous thought if you consider as for "some days"
	Insert plug so that electrical cord face downward. ◇ It cause of electrical shock or Fire accident by short circuit or over heating due to irregular condition when cord is inserted as face up.		Make sure there is no shaking after inserting plug in to socket. ◇ It cause of electric shock or fire accident by weakening electrical Insulation.
	Make a call for service if electric cord is damaged. ◇ It cause of fire or electric shock or short circuit.		If you feel there is leakage of flammable gas, make ventilation so that refrigerator does not exposed to gas. ◇ It cause of explosion, fire or burning accident by flame at electrical connection.

Downloaded from www.Manualslib.com manuals search engine

⚠ Warning

Do not touch electric source plug with wet hand. ◇ It cause of electric shock.	Do not use distribution socket. ◇ It cause of fire by abnormal heat When connect with multiple line. ◇ Only use single socket with Rated capacity over 220V.
Do not connect to other electric source except 220V. ◇ It cause of fire, electric shock and out of order.	Do not use damaged cord or electric source plug, loosened socket. ◇ It cause of electric shock or fire by short circuit or over heating.
Do not let electric source plug or wire to be pressed by refrigerator or other object. ◇ It cause of fire by damage of electric source plug or wire.	Do not pull plug only with gripping cord. ◇ It cause of electric shock or fire by broken wire and short circuit. ◇ Always pull plug from socket by gripping body of plug.
Do not let electric source cord exposed at electric heating source. ◇ It cause of fire or electric shock by damaging of cord. ◇ When cord is damaged, stop using it and call service center to replace part.	Do not put container with water on the top of refrigerator. ◇ It cause of short circuit, electric shock or fire by weakening of electrical insulation of parts when water is spilt from container.
Do not spray water at main body or Inside of refrigerator. ◇ It cause of electric shock or fire By weakening of electrical insulation.	Do not move rack with food stuffs on the rack. ◇ It may cause of hurt by dropping down of a food stuffs.
Do not pull down door with gripping It. ◇ It may cause of falling down or hurt such as finger constriction accident.	Do not climb over refrigerator. ◇ It may cause of hurt by falling Down of a refrigerator.
Never try to Disassemble or repair or remodeling. ◇ It may cause of hurt by fire or abnormal operation.	Do not let sheath of electric cord to be peeled off by pressing of heavy obstacle or pull or bend electric cord forcefully. ◇ It may cause of fire or electric shock when sheath is damaged.
Do not use flammable spray nearby refrigerator. ◇ It may danger of fire at electrical Connection.	Do not put flammables inside of refrigerator. ◇ It may exist danger of ignition, explosion by thinner, benzene, LP gas or adhesive.

Downloaded from www.Manualslib.com manuals search engine

⚠ Warning

Do not keep medicine or materials for lecture.

◇ Do not keep materials at home refrigerator which need strict temperature control.

Certainly disconnect plug when access to the bottom rear side of machining chamber by hand.

◇ It cause electric shock or fire.

Change light inside of refrigerator after disconnecting plug.

◇ It may cause electric shock.

Use same capacity of fuse when changing fuse.

◇ It is danger of fire when use inadequate capacity of fuse.

Do not install earth to water line, gas line, telephone line and lightening rod.
◇ It cause of fire or electric shock.
◇ Certainly ask sales agent for earthing.

Make sure of earthing.

◇ It is danger of electric shock by a short circuit due to out of ordered part.
◇ Certainly ask sales agent for earthing.

⚠ Caution

Wear glove when change light Inside of a refrigerator because light may be broken or burning accident by hot light bulb.

Raise adjusting legs when moving refrigerator.

◇ It damage floor when moving refrigerator forcefully.
◇ Lay protective plate to protect floor with easily get damaged.

Do not insert hand under of Refrigerator.

◇ It may hurt hand by sharp plate when inserting hand for cleaning.

Do not touch compressor or piping at rear bottom side of refrigerator.
◇It may cause of burning accident by hot compressor or piping during operation or short time after stopping.

Do not store bottle at freezer.

◇ It is danger of hurt by broken Bottle due to freeze.

Do not eat food stuffs with odor or discolored.

◇ Food stuffs may be spoiled if It is stored for a long time even if It is stored at freezer or refrigerator.

When moving refrigerator, grip adjustable legs and upper part of rear side.

◇ Be careful so that hand is not slipped when gripping upper part of rear side.
◇ It may hurt hand by slippage.

Do not touch food or container at freezer or refrigerator with wet hand.

◇ It is danger of frostbite.

Disconnect electric source plug when do not use refrigerator for a long time.

◇ It cause of fire.

Downloaded from www.Manualslib.com manuals search engine

2. Product Specifications

2-1. Product specification

Item Description		Specifications				
Model Name		X22B..	22D..	22E..	22F..	22G..
Effective Internal Volume	Total Internal Volume	622 (577)ℓ	608 (549)ℓ	608 (538)ℓ	608 (549)ℓ	608 (538)ℓ
	Freezer	242 (204)ℓ	228 (179)ℓ	228 (179)ℓ	228 (179)ℓ	228 (179)ℓ
	Refrigerator	380 (373)ℓ	380 (370)ℓ	380 (359)ℓ	380 (370)ℓ	380 (359)ℓ
Outside Dimensions _ mm (WX D X H) _ Except Handle		906X735X1770				
Refrigerant / Quantity		R600a (0.075 Kg) or R-134a (0.190 kg)				
Class of Climate		T				
Weight		98 kg	106 kg	107kg	109 kg	111 kg

2-2. Specification of electrical parts

Item Description		Specifications				
Model Name		X22B..	22D..	22E..	22F..	22G..
Performance of Freezer		4-Star				
Freezer Parts	Evaporator	FIN TYPE				
	Condenser	Compulsory Convection Type				
	Dryer	MOLECULAR SIEVE XH-9				
	Capillary tube	IDΦ0.7 X 0.55t X L2,340				
Defrost related parts	Defrost Heater	250 – 280W				
	D-Sensor (Type/ Temperature return)	PBN-43 / 13℃				
	Temperature Fuse	250V / 10A / 77 (+0,-4)℃				

B : Basic (None H/Bar, None Magic Room)
D : Dispenser (None H/Bar, None Magic Room)
E : Dispenser + Magic Room (None H/Bar)
F : Dispenser + H/Bar (None Magic Room)
G : Dispenser + H/Bar + Magic Room

Downloaded from www.Manualslib.com manuals search engine

Item Description		Specifications				
Model Name		X22B..	22D..	22E..	22F..	22G..
Other electric part spec.	Main Fuse	AC250V /15A				
	Home Bar Heater	5W (Control per RT & Time)				
	Freezer(F) Fan Motor	DC12V / Φ140				
	Condenser(C) Fan Motor	DC12V / Φ150				
	Refrigeratior(R) Damper	DC12V				
	Switching Room Damper	–	–	DC12V	–	DC12V
	Lamp of Freezer	LED (DC12V / 1.44W)				
	Lamp of Refrigerator	LED (DC12V / 2.16W)				
	Freezer/Refrigerator Door Switch	SP101B (AC 250 V, 0,5A)				
	Home Bar Door Switch	–			DC 12V / RS-D4(REED S/W + MAGNET)	
	electric source cord	AC250V 16A				
	F/R – Sensor	PT-38 / PBN-43B				

2-3. Temperature controlling of freezer & refrigerator

1) Basic Models

Freezer			Refrigerator		
Step	Display	ON / OFF	Step	Display	ON / OFF
Light	-16	-11.2 / -15.2	Light	8	10.5 / 10.0
Light medium1	-17	-12.2 / -16.2	Light medium1	7	9.5 / 9.0
Light medium2	-18	-13.2 / -17.2	Light medium2	6	8.6 / 8.1
Medium	-19	-14.0 / -18.0	Light medium3	5	7.6 / 7.1
Medium strong1	-20	-15.0 / -19.0	Medium	4	6.5 / 6.0
Medium strong2	-21	-16.9 / -20.9	Medium strong	3	5.5 / 5.0
Strong	-22	-18.7 / -22.7	Strong	2	4.5 / 4.0
High Speed	-22	–	High Speed	2	–

2) Dispenser Models

Freezer			Refrigerator		
Step	Display	ON / OFF	Step	Display	ON / OFF
Light	-16	-11.2 / -15.2	Light	8	11.2 / 10.7
Light medium1	-17	-12.2 / -16.2	Light medium1	7	10.2 / 9.7
Light medium2	-18	-13.2 / -17.2	Light medium2	6	9.3 / 8.8
Medium	-19	-14.0 / -18.0	Light medium3	5	8.3 / 7.8
Medium strong1	-20	-15.0 / -19.0	Medium	4	7.2 / 6.7
Medium strong2	-21	-16.9 / -20.9	Medium strong	3	6.2 / 5.7
Strong	-22	-18.7 / -22.7	Strong	2	5.2 / 4.7
High Speed	-22	–	High Speed	2	–

Downloaded from www.Manualslib.com manuals search engine

3. Wiring Diagram

3-1. Applicable model (Basic Model)

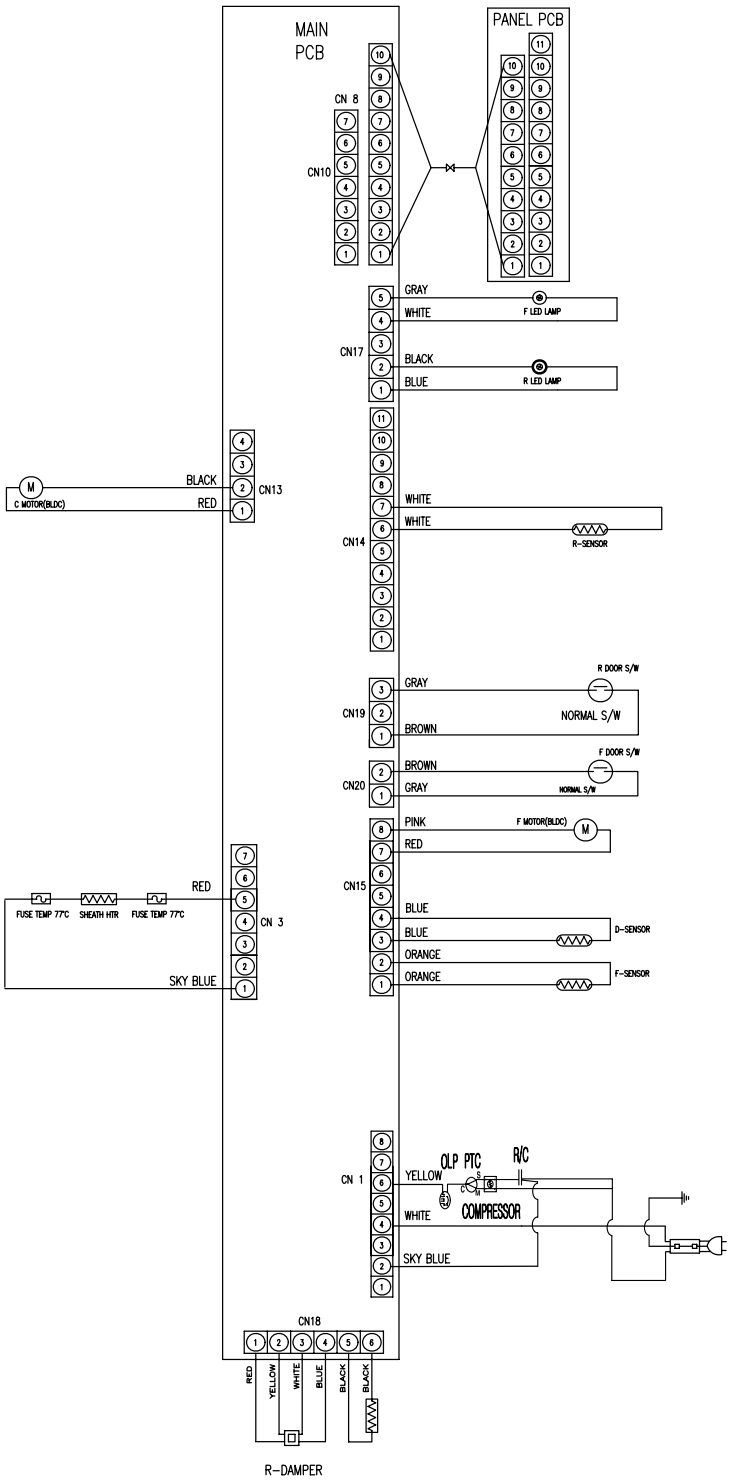

Downloaded from www.Manualslib.com manuals search engine

3-2. Dispenser Model

Dispenser Model (Normal)

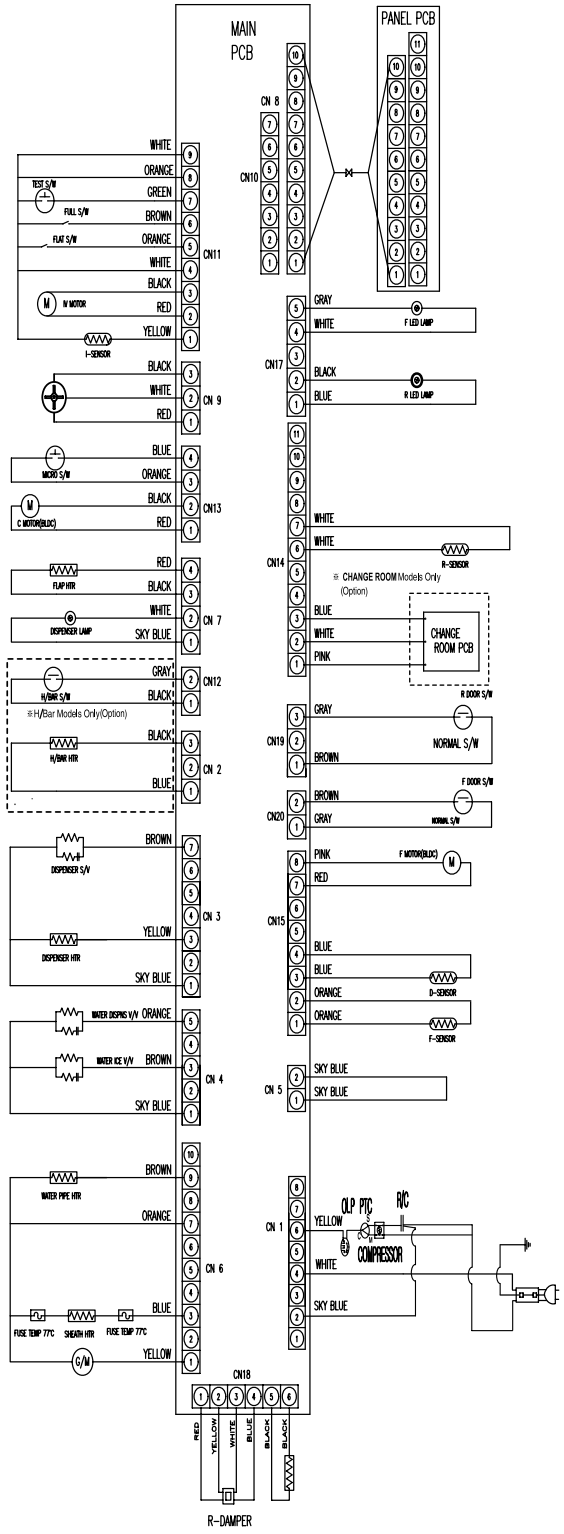

Dispenser Model (Inverter)

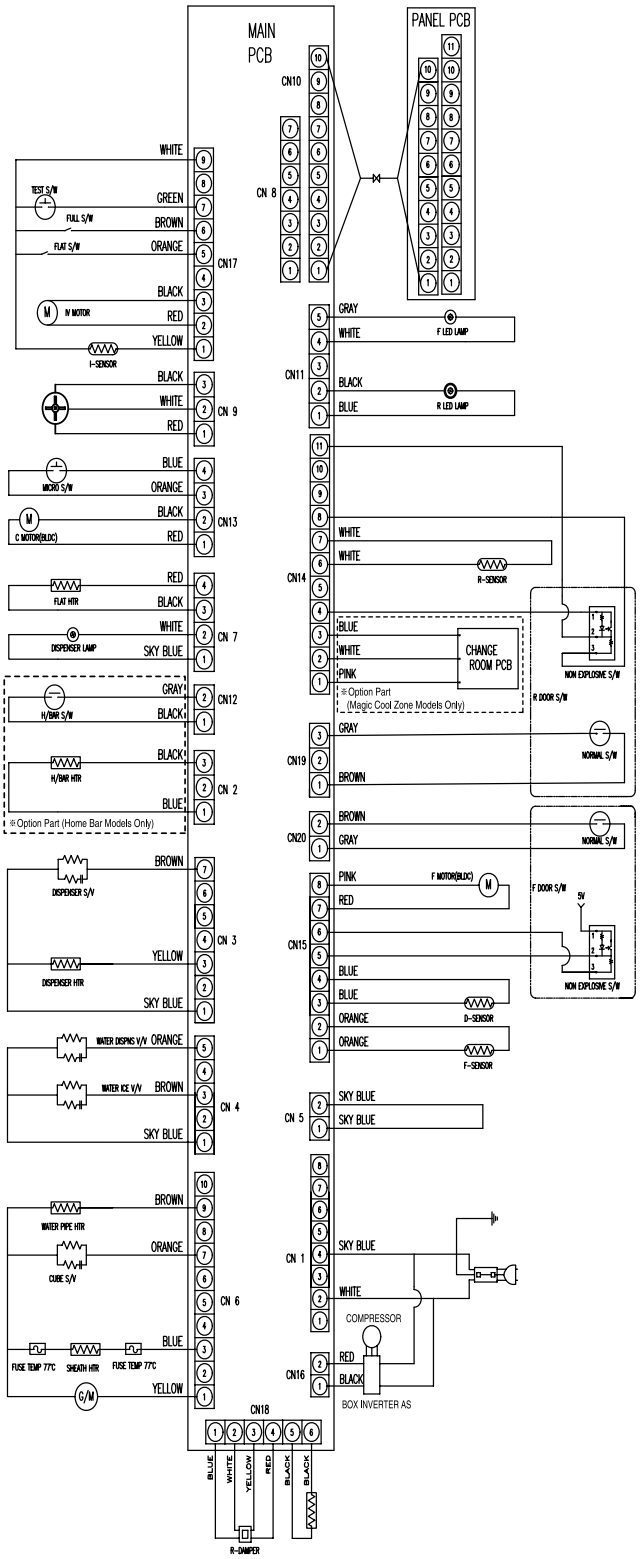

Downloaded from www.Manualslib.com manuals search engine

4. Outside Dimensions and Names of Refrigerator

4-1. Outside dimensions (All Models)

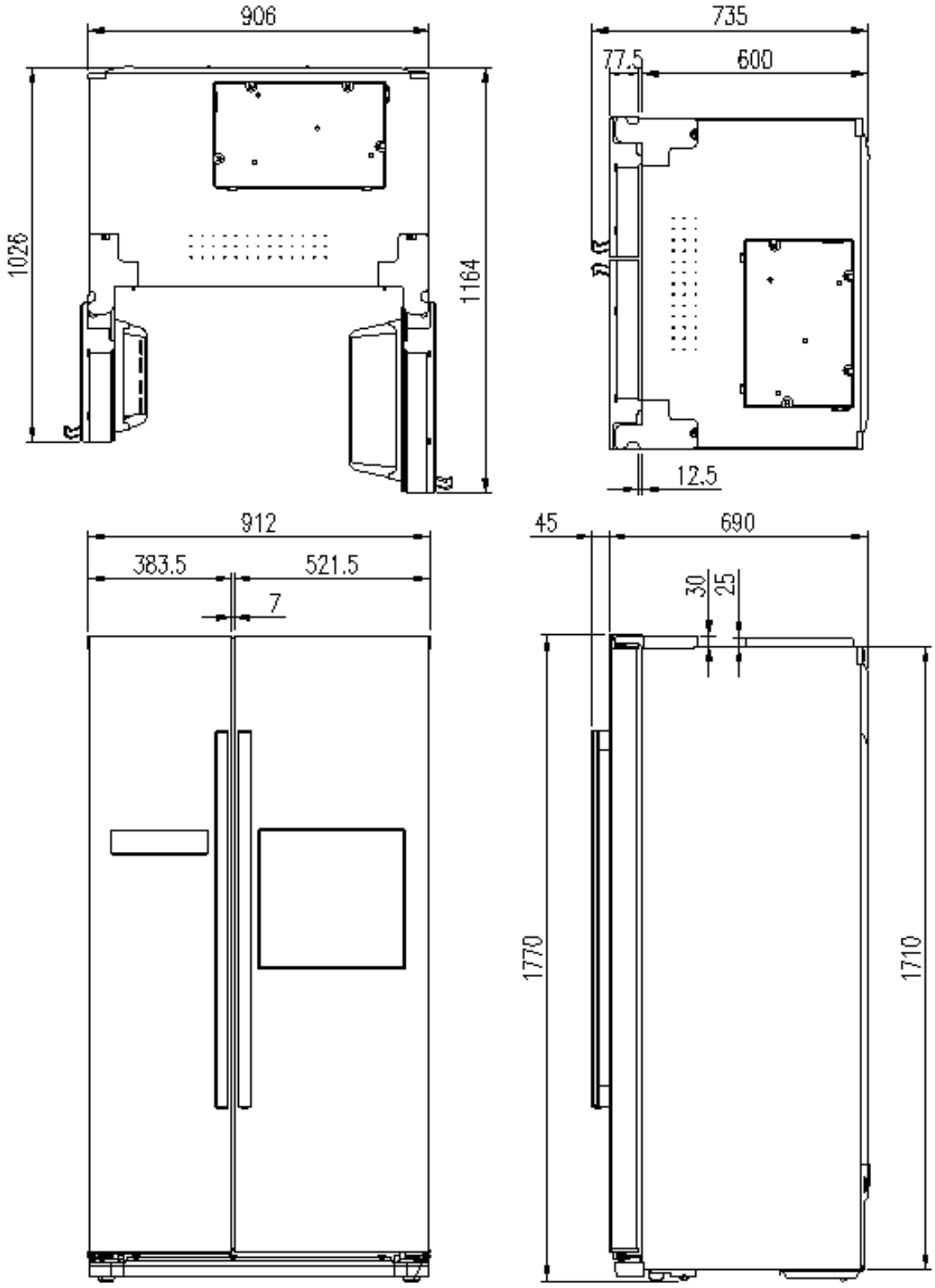

Downloaded from www.Manualslib.com manuals search engine

4-3. Name of each parts (X-22B..)

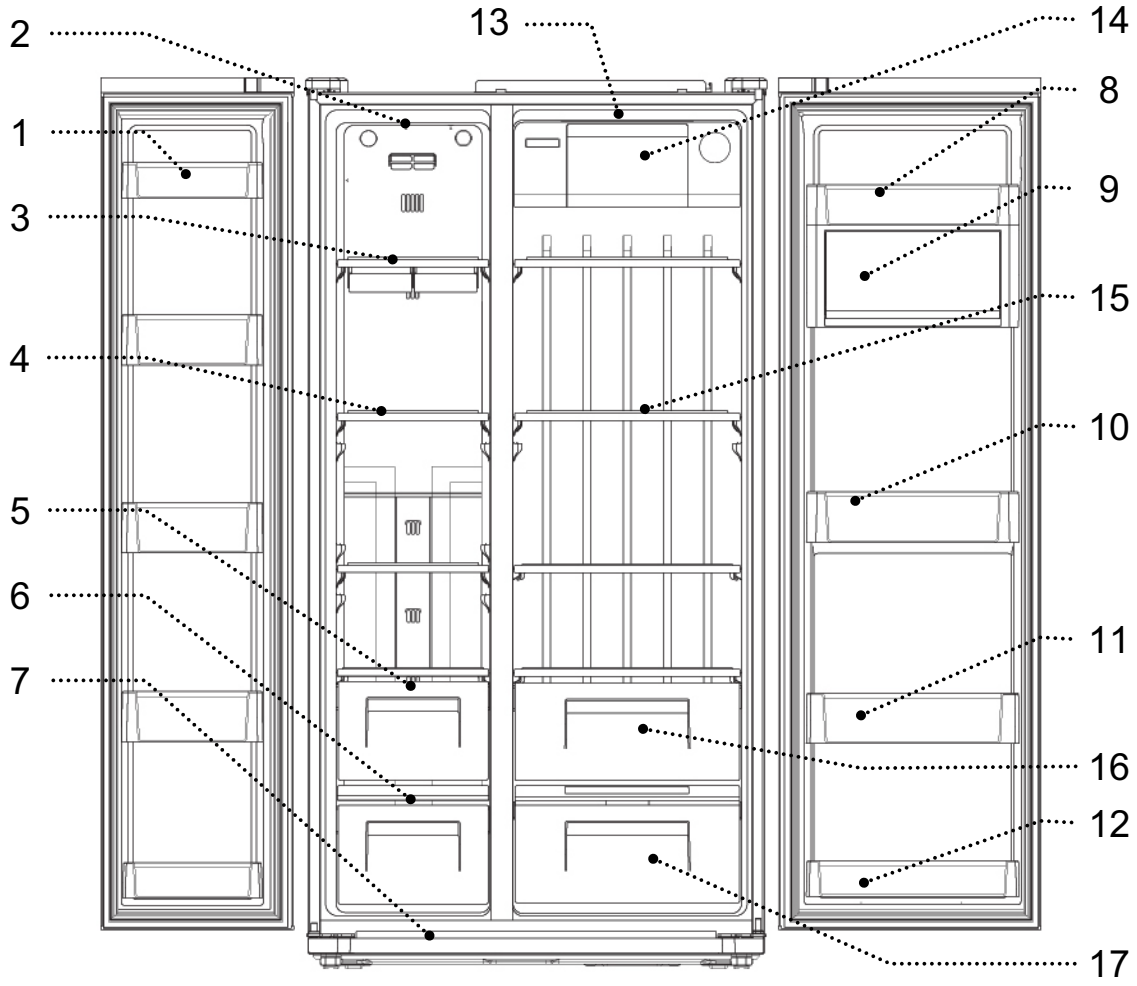

Freezer	Refrigerator
1. Freezer Pocket	8. Refrigerator Pocket Upper
2. Freezer Inner Lamp	9. Multi plus Zone
3. Twist Ice Maker	10. Jumbo Pocket
4. Freezer Rack	11. Refrigerator Pocket
5. Dried Stuffs Storing Chamber	12. Refrigerator Pocket Bottom
6. Meat/Fishery Storing Chamber	13. Refrigerator Inner Lamp
7. Front Plate Cover	14. Express Can Chiller
	15. Refrigerator Rack
	16. Vegetable Chamber
	17. Vegetable Chamber

Downloaded from www.Manualslib.com manuals search engine

4-4. Name of each parts (22E/G..)

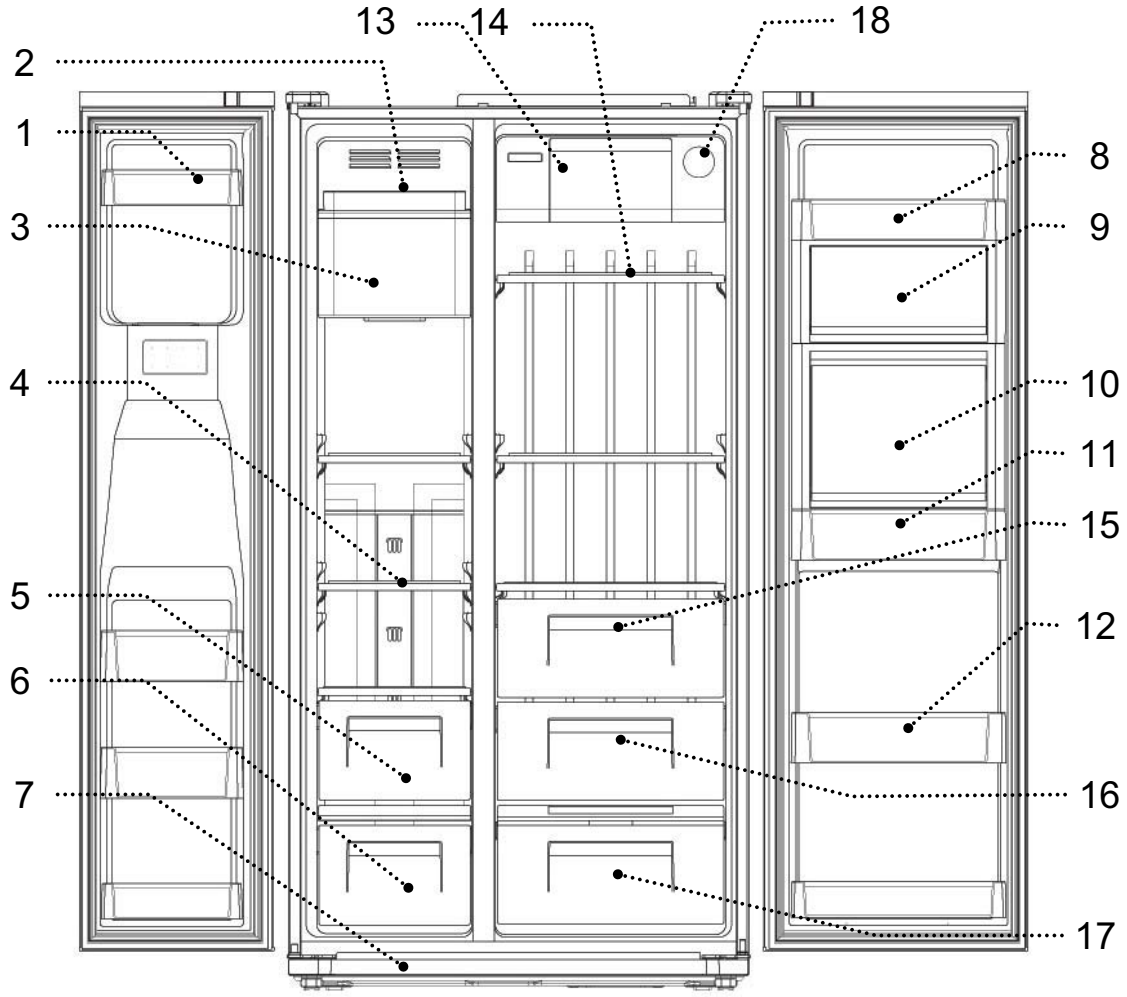

Freezer	Refrigerator
1. Freezer Pocket	8. Refrigerator Pocket Upper
2. SPACE SAVE ICE MAKER	9. Multi plus zone
3. Automatic Ice Maker	10. Home Bar Case (Option)
4. Freezer Rack	11. Home Bar Pocket
5. Dried Stuffs Storing Chamber	12. Refrigerator Pocket
6. Meat/Fishery Storing Chamber	13. Express Can Chiller
7. Front Plate Cover	14. Refrigerator Rack
	15. Vegetable Chamber
	16. Vegetable Chamber
	17. Magic Cool Zone
	18. Internal Type Water Filter (Option)

Downloaded from www.Manualslib.com manuals search engine

4-5. Name of each parts (22D/F..)

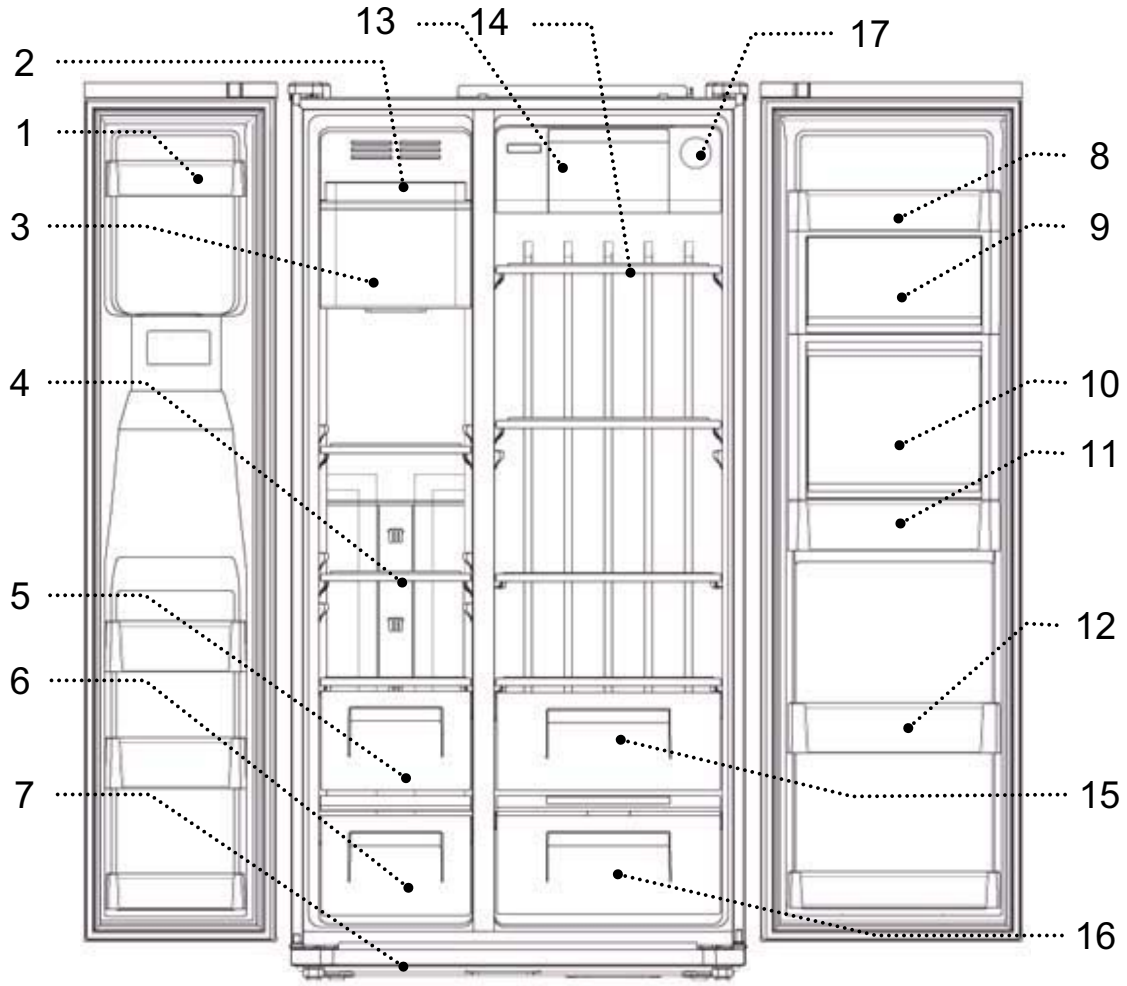

Freezer	Refrigerator
1. Freezer Pocket	8. Refrigerator Pocket Upper
2. SPACE SAVE ICE MAKER	9. Multi plus Zone
3. Automatic Ice Maker	10. Home Bar Case (Option)
4. Freezer Rack	11. Home Bar Pocket
5. Dried Stuffs Storing Chamber	12. Refrigerator Pocket
6. Meat/Fishery Storing Chamber	13. Express Can Chiller
7. Front Plate Cover	14. Refrigerator Rack
	15. Vegetable Chamber
	16. Vegetable Chamber
	17. Internal Water Filter (Option)

Downloaded from www.Manualslib.com manuals search engine

5. Refrigeration Cycle

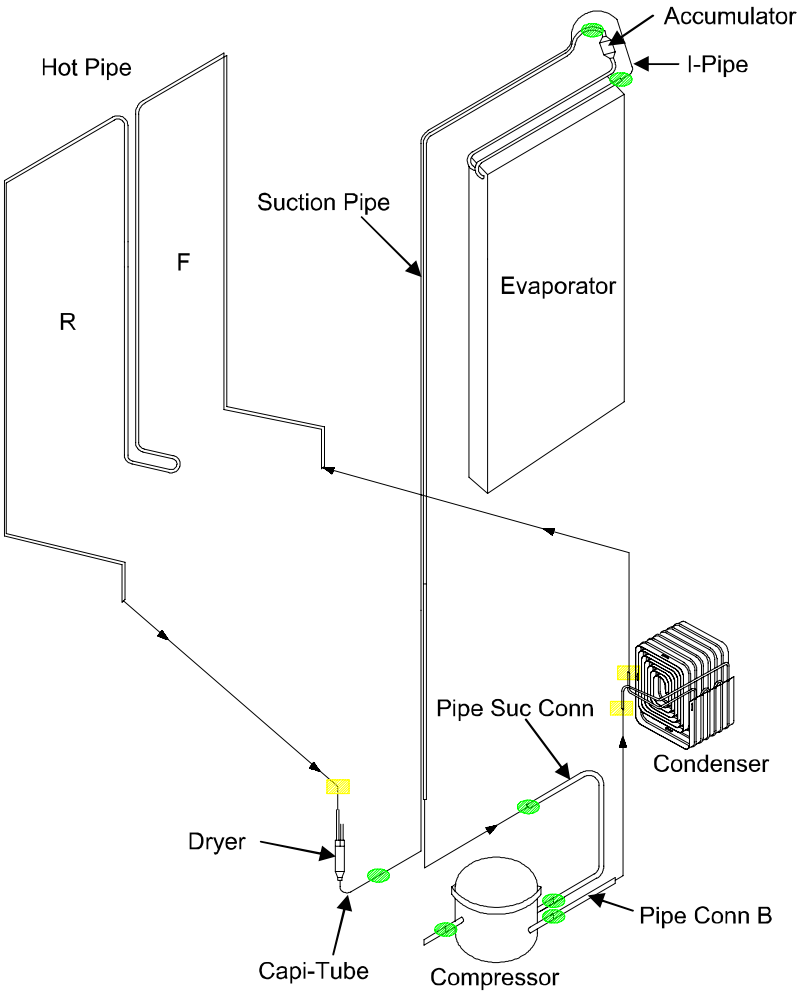

▶ Welding Point

●	Copper Welding (Ag 5%)	7 Points
■	Silver Welding (Ag 35%)	3 Points

▶ Flow of Refrigeration Cycle

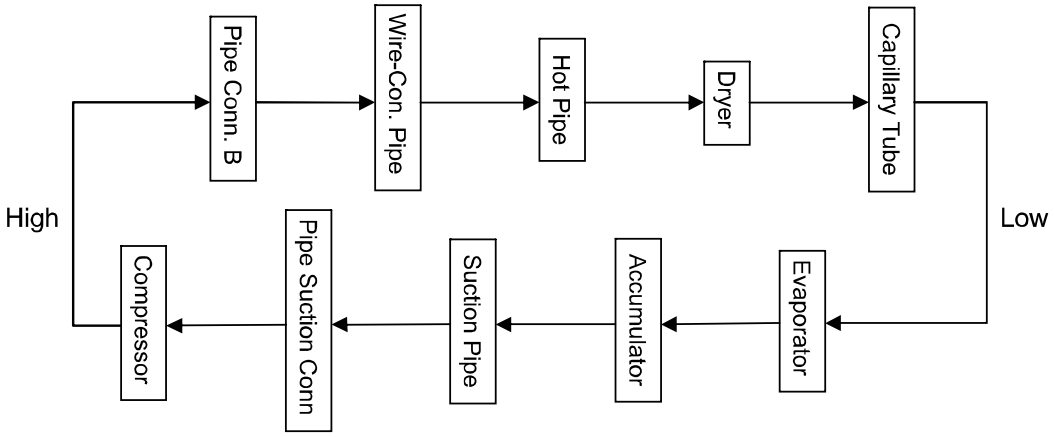

Downloaded from www.Manualslib.com manuals search engine

6. Functions & Operating Method of Refrigerator

- Sequence -

■ X-22B (General Type Mode) 22D/E /F/G(Dispenser Type Model)

6-1. Display
6-2. Freezer Temperature Control
6-3. Refrigerator Temperature Control
6-4. Fan Control for Each Models
6-5. General Defrost
6-6. A/S Compulsory Defrost
6-7. Comp RPM Control
6-8. Initial Defrosting
6-9. Intermittent Operation
6-10. Protection of Comp Reoperation
6-11. Time Saving Function
6-12. Buzzer Function
6-13. Delay Time of Electrical Goods
6-14. Inner Light Control Function
6-16. light Freezing Option
6-17. Automatic Ice Maker
6-18. Error Display & Control Methods
6-19. Switching Room Control Function
6-20. Summary of Function Button

Downloaded from www.Manualslib.com manuals search engine

6-1. Display

■ 22D/E/F/G (Dispenser Type Model)

Input Screen	Control For
<F-PCB Button> Adjust Freezer, Adjust Refrigerator, Locking, WATER , ICE , LIGHT/Filter Reset	Display

Contents

Applicable Model : 22D/E/F/G

1. "Adjust Freezer" Button

(1) When touching "Adjust Freezer", it is possible to do freezer temperature control by steps and possible to do high speed freezer operation.

(2) When selecting each dial, it operates with selected dial indication value and then operates with set high speed operation and when set high speed operation time reaches, it goes back to operate with dial -19℃ set value. (When touch "Adjuster Freezer" once again before finishing of high speed operation, high speed operation to be finished and operation to be changed to dial -16℃ and it operate with set value of "Adjust Freezer" made by contacting it.)

(3) When touch "Adjust Freezer", it controls temperature by steps (7Step) and when input electric source, initial setting displays dial setting temperature as for previous electric source off condition.(But, it displays 'medium' temperature until 5 days after release.) Display sequence:(-19℃)→(-20℃)→(-21℃)→(-22℃)→High Speed(-22℃)→(-16℃)→(-17℃)→(-18℃)

(4)When selecting high speed operation, 'High Speed Icon' blinks 6 times and become light and displays set temperature dial -22℃ .

(5) Adjust freezer set temperature value and display

Temperature Adjusting	light	Light medium1	Light medium2	medium	Medium strong1	Medium strong2	strong
Set temp.(°F)	4	2	0	-2	-4	-6	-8
Set temp.(℃)	-16	-17	-18	-19	-20	-21	-22

2. "Adjust Refrigerator" button

(1) When touch "Adjust Refrigerator", it controls temperature of refrigerator by step and high speed refrigeration operation is possible.

(2) When selecting each dial, it operates with selected dial indication value and then operates with set high speed operation and when set high speed operation time reaches, it goes back to operate with dial 2℃ set value. (When touch "Adjust Refrigerator" again for two times before finishing high speed operation, high speed operation to be changed to dial 4℃ and it operates with set value of "Adjust Refrigerator" made by contacting it.)

(3) When touch "Adjust Refrigerator", it controls temperature by step(7Step) and when input electric source, initial setting displays dial setting temperature as for previous electric source off condition. (But, it displays 'medium' temperature until 5 days after release) Display sequence : (4℃)→(3℃)→(2℃)→High Speed(2℃)→ (8℃)→(7℃) →(6℃)→(5℃)

(4) When selecting high speed operation ,'High Speed Icon' blinks 6 times and become light and displays set temperature dial 4℃ .

(5) Adjust refrigerator set temperature and display

Temperature Adjusting	light	Light medium1	Light medium2	Light medium3	medium	Medium strong	strong
Set temp.(°F)	47	45	43	41	39	37	35
Set temp.(℃)	8	7	6	5	4	3	2

Downloaded from www.Manualslib.com manuals search engine

Contents

3. Water (Here in after indicates as "Water Selection")
(1) Water Selection Function
(2) When press "Water/Ice Selection" button, it selects 'Water Selection' and water icon become light.
(When input electric source, it automatically set to 'Water Selection' initially.)

4. ICE (Here in after indicates as "Ice Selection"/"Ice Making Stop")
(1) When press "Ice Selection" button, it selects 'Ice' and ice icon becomes light.
- When select "Ice Selection", water icon becomes off.
(2) When press "Ice Selection" button for 3 seconds, "Ice Making Stop" is selected and ice making stop icon become light.
- When select "Ice Making Stop", "Water Selection" icon becomes on.
(3) When press "Ice Selection" button for 3 seconds at "Ice Making Stop" condition, it release "Ice Making Stop"
(When input electric source, both "Ice Selection" & "Ice Making Stop" icon become off.)

5. Lock (Here in after indicates as "Locking")
(1) Entering method: When press "Locking" button for 0.5 second, "Locking Icon" becomes on. When "Locking" function is
set, all other key operation is not possible (Includes dispenser switch) and also buzzer does not operate.
(2) Release method: When press "Locking" button for 3 seconds,"Locking Icon" becomes off and release "Locking".

6. Light/Filter (Here in after indicates as "lamp")
(1) Dispenser LED lamp control
① When press "lamp", dispenser LED lamp becomes light continuously.
② When press "lamp" at LED lamp on condition, LED lamp becomes off.
(2) Dispenser filter reset
① 6 months later after input electric source, icon repeats on / off. blink.
② When press light button for 3 seconds after changing filter, LED lamp becomes off.

7. Alarm function (Buzzer does not noise and only 88 display blinks)
(1) Purpose: Function to check inside temperature of a refrigerator such as power failure.
(2) Operating condition: When inside temperature of a refrigerator becomes R/S on point + 10℃ or F/S on point + 20℃ raised (It does not operate for a cycle of compressor after defrost).
(3) Display method : Blinks alarm icon and records maximum temperature inside of refrigerator and displays it at 88 display of freezer/refrigerator (Maximum possible display temperature: 40℃/ 99°F)
- During alarm mode, when electric source is disconnected, it saves maximum temperature and alarm mode condition and when electric source is connected, it displays alarm function. (But, it does not save condition during 5 days after release.)
- Even though function of a refrigerator becomes normal operation condition and inside temperature of a refrigerator becomes normal range, alarm icon stay blinks and displays maximum temperature stored at 88 display. (To check temperature by user.)

(4) Release method : When press "Locking"button, alarm condition becomes released and alarm icon becomes off and 88display displays adjusted temperature value.

8. Change temperature unit (°F ↔ ℃) display
(1) Changing method : At "Locking" condition by lock key, when press "lamp" button and "Water Selection" button together for 10 seconds, temperature display becomes changed.
(2) When input electric source, it is set to ℃ initially..

9. Display off function (PCB energy saving function)
(1) When it passes 5 minutes without key operation or door operation, 88 display, high speed icon ,lock icon and dispenser LED lamp become off. (Other LED display continuously)
(2) When there is operation for key or door at LED off condition, LED display with normal condition.

10. System off function
(1) Purpose: Stop refrigerator function during vacation without disconnecting plug.
(2) Operating method: At unlocking condition, press both freezer adjusting key and refrigerator adjusting key for 5 seconds.
(3) When set to off, temperature display at freezer/refrigerator display as '-- --' light and other LED is off with all electrical goods become off.
- During system off mode, even if electric source is disconnected, it saves mode condition and when electric source is connected, it displays saved condition. (But, it does not save condition during 5 days after release.)
(4) During system off condition, switching room display becomes off. (Heater light control stop.)
(5) During system off condition, damper keeps as opened condition.(For ventilation)
(6) Release method: Press both freezer adjusting key and refrigerator adjusting key for 5 seconds.
(7) When release system off function, refrigerator start to operate again.

Downloaded from www.Manualslib.com manuals search engine

■ X22B (General Type Model)

Input For	Control For
<F-PCB Button> Adjust Freezer, Adjust Refrigerator, Locking	Display

Contents

Applicabe Model : X22B

1. "Adjust Freezer" button

(1) When press "Adjust Freezer", it is possible to adjust temperature of freezer by step and high speed refrigerator operation is possible.

(2) When selecting each dial, it operates with selected dial indication value and then operates with set high speed operation and when set high speed operation time reaches, it goes back to operate with dial -19℃ set value. (When touch "Adjuster Freezer" once again before finishing of high speed operation, high speed operation to be finished and operation to be changed to dial -16℃ and it operate with set value of "Adjust Freezer" made by contacting it.)

(3) When touch "Adjust Freezer", it controls temperature by steps (7Step) and when input electric source, initial setting displays dial setting temperature as for previous electric source off condition.(But, it displays 'medium' temperature until 5 days after release.) Display sequence:(-19℃)→(-20℃)→(-21℃)→(-22℃)→High Speed(-22℃)→(-16℃)→(-17℃)→(-18℃)

(4) When selecting high speed operation, 'High Speed Icon' blinks 6 times and become light and displays set temperaturedial -22℃ .

(5) Adjust freezer set temperature value and display

Temperature Adjust	light	Light medium1	Light medium2	medium	Medium strong1	Medium strong2	strong
Set temp.(°F)	3.2	1.4	-0.4	-2	-4	-6	-8
Set temp.(℃)	-16	-17	-18	-19	-20	-21	-22

2. "Adjust Refrigerator" button

(1) When touch "Adjust Refrigerator", it control s temperature of refrigerator by step and high speed refrigeration operation is possible.

(2) When selecting each dial, it operates with selected dial indication value and then operates with set high speed operation and when set high speed operation time reaches, it goes back to operate with dial 2℃ set value. (When touch "Adjust Refrigerator" again for two times before finishing high speed operation, high speed operation to be changed to dial 4℃ and it operates with set value of "Adjust Refrigerator" made by contacting it.)

(3) When touch "Adjust Refrigerator", it controls temperature by step(7Step) and when input electric source, initial setting displays dial setting temperature as for previous electric source off condition. (But, it displays 'medium' temperature until 5 days after release) Display sequence : (4℃)→(3℃)→(2℃)→High Speed(2℃)→ (8℃)→(7℃) →(6℃)→(5℃)

(4) When selecting high speed operation ,'High Speed Icon' blinks 6 times and become light and displays set temperaturedial 4℃ .

(5) Adjust Refrigerator set temperature and display

Temperature Adjust	light	Light medium1	Light medium2	Light medium3	medium	Medium strong	strong
Set temp.(°F)	47	45	43	41	39	37	35
Set temp.(℃)	8	7	6	5	4	3	2

Downloaded from www.Manualslib.com manuals search engine

Contents

3. Lock (Here in after indicates as “Locking”)
(1) Entering method: When press “Locking” button for 0.5 second, “Locking Icon” becomes on. When “Locking” function
is set, all other key operation is not possible (Includes dispenser switch) and also buzzer does not operate.
(2) Release method: When press “Locking” button for 3 seconds,“Locking Icon” becomes off and release “Locking”.

4. . Alarm function (Buzzer does not noise and only 88 display blinks)
(1) Purpose: Function to check inside temperature of a refrigerator such as power failure.
(2) Operating condition: When inside temperature of a refrigerator becomes R/S on point + 10℃ or F/S on point + 20℃ raised (It does not operate for a cycle of compressor after defrost).
(3) Display method : Blinks 88 display of freezer or refrigerator at alarm function and records maximum temperature inside of refrigerator and displays it at 88 display of freezer/refrigerator (Maximum possible display temperature: 40℃)
- During alarm mode, when electric source is disconnected, it saves maximum temperature and alarm mode condition
and when electric source is connected, it displays alarm function. (But, it does not save condition during 5 days after
release.)
- Even though function of a refrigerator becomes normal operation condition and inside temperature of a refrigerator becomes normal range, alarm icon stay blinks and displays maximum temperature stored at 88 display. (To check temperature by user.)
(4) Release method : When press “Locking”button, alarm condition becomes released and alarm icon becomes off and 88display displays adjusted temperature value.

5. Display off function (PCB energy saving function)
(1) When it passes 5 minutes without key operation or door operation, 88 display, high speed icon ,lock icon and dispenser LED lamp become off. (Other LED display continuously)
(2) When there is operation for key or door at LED off condition, LED display with normal condition.

6. System off function
(1) Purpose: Stop refrigerator function during vacation without disconnecting plug.
(2) Operating method: At unlocking condition, press both freezer adjusting key and refrigerator adjusting key for 5 seconds.
(3) When set to off, temperature display at freezer/refrigerator display as ‘-- --‘ light and other LED is off with all electrical goods become off.
- During system off mode, even if electric source is disconnected, it saves mode condition and when electric source is connected, it displays saved condition. (But, it does not save condition during 5 days after release.)
(4) During system off condition, switching room display becomes off. (Heater light control stop.)
(5) During system off condition, damper keeps as opened condition.(For ventilation)
(6) Release method: Press both freezer adjusting key and refrigerator adjusting key for 5 seconds.
(7) When release system off function, refrigerator start to operate again.

Downloaded from www.Manualslib.com manuals search engine

6-2. Freezer Temperature Adjust

■ X22B,22D/E/F/G

Input For	Control For
1. Freezer Temperature Adjust Button 2. F-Sensor	1. Comp 2. F-Fan

Contents

1. Adjust temperature mode of Freezer using adjust freezer.
   Temperature adjusting steps: light → light medium 1 → light medium 2 → medium → medium strong 1 → medium strong 2 → strong → High Speed
   Set display : -16℃ -17℃ -18℃ -19℃ -20℃ -21℃ -22℃ -22℃

2. Compressor and F-Fan is controlled by on/off point of each mode.

3. Freezer on/off difference : 4℃
   (Off point among freezer dial: ■ 22/D/E/F/G: -20.5℃, ■ X22B : -18.5 ℃)

4. Freezer step difference
   (1) light → light medium 1 → light medium 2 → medium : 1 deg. for each step.
   (2) medium → medium strong → strong : 2 deg.

5. High speed freezer
   (1) High speed freezer operates for 24 hours with F-dial 'strong' set value.

6. Control point per each mode

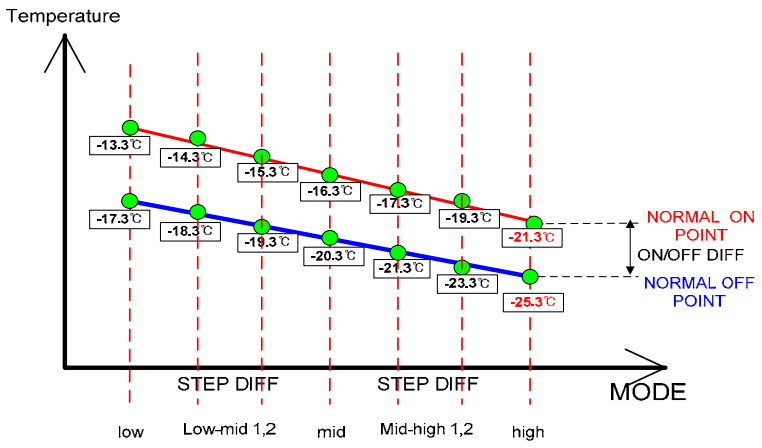

Downloaded from www.Manualslib.com manuals search engine

6-3. Refrigerator Temperature Adjust

■ Common to all Models

Input For	Control For
1. Refrigerator Temperature Adjust Button 2. R-sensor	1. Comp 2. R-Fan

Contents

1. Adjust temperature mode of refrigerator by pressing adjust refrigerator.
   Temperature adjusting steps: light → light medium 1 → light medium 2 → light medium 3 → medium → medium strong → strong
   Set Display : 8℃ 7℃ 6℃ 5℃ 4℃ 3℃ 2℃

2. R-damper is controlled by on/off point of each mode.
1) When R-damper is opened, F-Fan becomes on condition regardless of compressor operation.
2) When R-damper is closed, F-Fan is connected operation with compressor operation.

3. Refrigerator on/off difference : 0.5℃
   (Off point of refrigerator: 6.0℃)

4. Refrigerator step difference
   light → light medium 1 → light medium 2 → light medium 3 →medium → medium strong → strong:
   1 deg. for each step

5. Prohibit light refrigeration
   (1) When sensing light refrigeration, compressor start on regardless of F-sensor.
   (2) When R-sensor reaches to R-fan off point, compressor is controlled by F-sensor and R-fan becomes off.
   (3) Sensing point of light refrigeration: R sensor off point of each model + 7℃
   (4) Release point of light refrigeration: Same point as R sensor off point for each model.

6. Control point per each mode

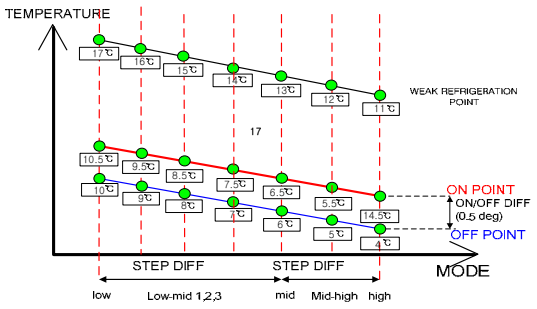

7. High speed refrigeration continues approx. 40 minutes.
   (1) R-fan, Inter cooler fan and compressor stay on until R-sensor reaches to over refrigeration off point(-7 deg). (But, Inter cooler fan stays on for 10 minutes and when high speed refrigeration is released within 10 minutes by button operation, inter cooler fan becomes off)
   (2) After reach to over refrigeration point, it operates with dial strong on/off value until high speed refrigeration is finished.
   (3) When high speed refrigeration is finished,(light mode passed 40 minutes) , it goes back to normal operation mode(Operate with dial medium)

Downloaded from www.Manualslib.com manuals search engine

6-4. Fan Control for each Mode

■ Common for all Models

Input For	Control For
1. R-Sensor 2. F-Sensor	1. F-Fan 2. C-Fan 3. R Damper

Contents

1. Fan voltage per control mode
   (1) Exerted fan motor voltage

Mode	F-Fan	C-Fan
Normal	10 V	13 V
Freezer High Speed	13 V	13 V
Freezer Against Load	13 V	13 V

● Norma control ☞ Slow operation mode with relatively low noise level.
● Load response ☞ Operation mode which need to be operated by temperature rise at inner side of refrigerator according to operating condition.

2. Load response mode
   (1) Purpose : To recover temperature rise inside of refrigerator as quickly as possible by heavy load or frequent door opening during using refrigerator.
   (2) Operating condition
   - When door opening time is more than 1 minutes per 1 time → F/R go to load response mode.
   - When sensing more than R/S On Point + 5deg → R load response
   - When sensing more than F/S On Point + 5deg → F load response
   (3) Conditions for not entering into load response mode.
   - When there is no door opening signal during and after defrost cycle, load response mode is not entered into operation.
   (But, when there is door opening signal during defrost cycle with load response entering condition (More than on Point + 5deg), it enter into load response mode)
   (4) Control method : Operates compressor with 1 step up RPM than compressor RPM at relevant RT-S condition. (But, when more than RT-S 40℃ , compressor operates with 3,990RPM)
   (5) Finish condition
   - F, R load response mode finishes 20 minutes after entering into load response mode.
   (But, when operating condition enter again 20 minutes after load response mode, load response
   mode starts again)
   - When R sensor reaches to off point, R load response mode finishes.
   - When F sensor reaches to off point, F load response mode finishes.

Downloaded from www.Manualslib.com manuals search engine

6-5. Normal Defrost

■ Common for all Models

Input For	Control For
1. Accumulated Comp operating time 2. Operation ratio of Comp 3. Outside Temperature 4. Accumulated Door opening time	1. Comp 2. F-Fan 3. R-Damper 4. Defrost Heater

Contents

1. Defrost cycle operation condition
   (1) Accumulated compressor operation times : 10, ~ 40 hours
   (2) Accumulated door open times: 2 minutes (Applied each for F/R)
   (3) Total (compressor on times + compressor off times) times : 70 hours
   (4) Several errors : R1, F1, D1, F3, RT/S, Door SW error etc.

2. Defrost mode operation condition
   (1) In case accumulated compressor operation times reach 6.8 hours or 38 hours ,
   ① When there occur several errors.
   ② Or accumulated door open times exceed over 3 minutes (Whether one of F/R exceed more than 3 minutes), defrost mode start into operation.
   ③ When operating ratio exceed 85% for 2 hours.
   (2) When accumulated compressor operating time reaches to 40 hours without satisfying (1) condition, mandatory defrost mode start into operation.
   (3) When total times of (Comp. on time + comp. off time) exceed 70 hours without satisfying (1),(2)condition, mandatory defrost mode start into operation.

3. Sequence of normal defrost cycle

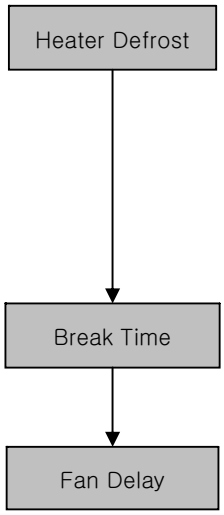

1) Comp off, Fan off, H/B-HTR off, D-HTR on ,R damper close
2) When D-sensor ≥13℃ , defrost heater becomes off.
3) When defrost heater start to operation by limit time (60 minutes) (F3-Error)

4) When D-sensor is at error condition, limit time = 30minutes, defrost heater becomes on.
5) Processing limit time
① 30 minutes:D1-error(In case of disconnection or short circuit)
② 60 minutes: When control status is at normal condition

1) Comp off, F fan off, D-HTR off
2) Breaking time = 10minutes

1) Comp on, H/B-HTR on, C fan on, F Fan off, D-HTR off
2) Fan delay time = 5 minutes

Downloaded from www.Manualslib.com manuals search engine

	HTR Defrost	Break Time	Fan Delay
Comp	Off	Off	On
F-Fan	Off	Off	Off
R-Damper	Off	Off	Off
D-HTR	On	Off	Off
Limit Time	-60Minutes -When D1 is at Error: 30minutes	10 minutes	5 minutes

5. Decision of defrost flow

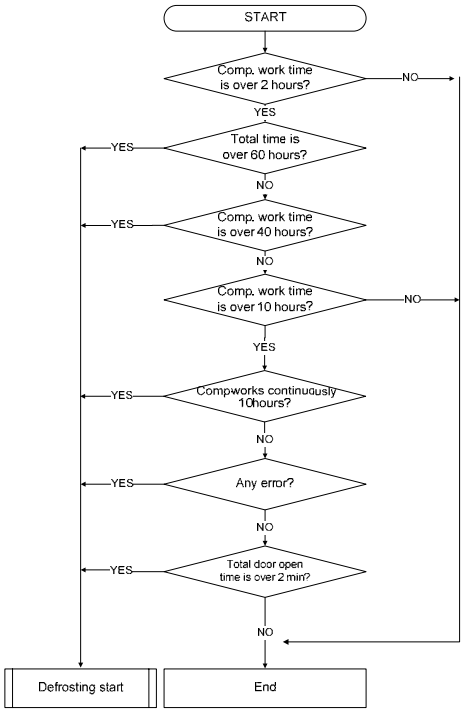

6-6. A/S compulsory defrost

■ Common to all models

Input for	Control for
1. Adjust Freezer Button 2. Adjust Refrigerator Button	Defrost Mode
Contents	
1. Entering method : At "Locking" condition, press "Adjust Freezer" button and press "Adjust Refrigerator" 5 times. 2. Processing method (1) Same as normal defrost mode except omitting Pre-Cool Mode. (2) For 30 seconds at initial stage, defrost heater operates compulsory regardless of temperature of D-sensor. (Defrost current inspection function)	

Downloaded from www.Manualslib.com manuals search engine

6-7. Comp RPM Control

■ Common to all models

Input For	Control For
N/A	Compressor

Contents

1. Comp RPM may be changed according to operating condition of RT-S & Set.
(Comp RPM is adjusted by control frequency of set at Main Micom.)

Temperature Condition	RT-S 30℃ ↓ (RT 29℃↓)	RT-S 30~35℃ (RT 29~34℃)	RT-S 36~40℃ (RT 34~40℃)	RT-S 40℃↑ (RT 40℃↑)
MICOM Output	61 Hz	85 Hz	122 Hz	133 Hz
Normal Operation	1830 RPM	2550 RPM	3660RPM	3990RPM
load response	2550 RPM	3650 RPM	3990 RPM	3990 RPM
High Speed Operation	3660RPM	3660 RPM	3660RPM	3990RPM
Intermittent Operation	3990RPM	3990 RPM	3990 RPM	3990 RPM

2. Detailed condition according to RT-S at normal operation.
(1) When RT-S exceeds over 30℃ at 1,800 RPM operation, it operates with 2,550 RPM.
(2) When RT-S becomes under 29℃ at 2,550 RPM operation, it operates with 1,880 RPM and becomes over 35℃, it operates with 3,660 RPM.
(3) When RT-S becomes under 34℃ at 3,600 RPM operation, it operates with 2,550 RPM and becomes over 40℃, it operates with 3,990 RPM.
(4) When RT-S becomes under 39℃ at 3,990 RPM operation, it operates with 3,660 RPM.

3. For the initial 5 minutes from connecting electric source to refrigerator, it operates with 1830RPM (Lowest speed)
(1) (Improving method for noise claim) In case for RT condition, load response condition etc. operates with 1,830RPM (Lowest speed)for the initial 5 minutes from connecting electric source to refrigerator and return to relevant RPM.

Downloaded from www.Manualslib.com manuals search engine

6-8. Initial Defrost

■ Common to all Models

Input For	Control For
D-Sensor Initial electric source	Defrost Mode
Contents	
1. When connecting initial electric source, if D-sensor ≤ 3.5 ℃ , it operates into defrost mode. (Start with pre-cool) 2. Compressor delay operation for 6 minutes at initial defrost operating condition.	

6-9. Intermittent operation

■ Common to all models

Input Screen	Control For
Front-PCB	Electrical Goods
Contents	
1. Operation method ■ 22D/E/F/G:Adjust refrigerator + Adjust freezer + press Ice selection button 5 times. ■ X22B:Adjust refrigerator + press Locking button 10 times. 2. Control method : Continuous operation of comp, F/C-fan. 3. Display operation : At error display mode, display “Co” (Refer error display) 4. Release method : Automatic release 30 hours after start of operation.	

Downloaded from www.Manualslib.com manuals search engine

6-10. Prohibition of compressor re-operation

■ Common to all models

Input For	Control For
N/A	Comp
Contents	
1. Compressor does not operates 6 minutes after off condition regardless of F-Sensor reach to on point..	

6-11. Time saving function

■ Common to all models

Input Screen	Control For
Main PCB	Electrical Goods
Contents	
1. Save 1 minute : Click 1 time of “fast key” at main-PCB. 2. Save 30 minutes : When press and hold “fast key”, then buzzer noises shortly and save 30 minutes. 3. Example for usage : Use when you want to reduce unnecessary time. (6 minutes stop function, fan delay function…)	

6-12. Buzzer function

■ Common to all models

Input for	Control for
1. F-PCB Button 2. Door Switch 3. Connecting initial electric source	Buzzer
Contents	
1. Buzzer noises when operating front-PCB button. 2. When connecting initial electric source, buzzer noise 3 seconds after connection. 3. During intermittent operation, A/S compulsory defrost, buzzer noises. 4. When perform fine adjustment of freezer/refrigerator, buzzer noise when press button. 5. Buzzer noise for every 1 minute after door is opened. (noise for 5 minutes).	

Downloaded from www.Manualslib.com manuals search engine

6-13. Delay Time for Electrical Goods

■ Common to all Models

Input For	Control For
Comp On / Off	1. Comp 2. F/C-Fan

Contents

1. Comp / C-Fan / F-Fan

(1)F-Fan time delay function when compressor on/off condition.

⇒ F-Fan on/off 1 minutes after compressor on/off.

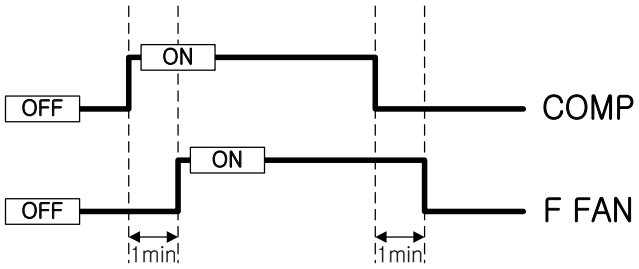

(2) Fan delay and priority

C-Fan ⇒ On 0.5 seconds after on condition happens.

F-Fan ⇒ On 1.o second after on condition happens.

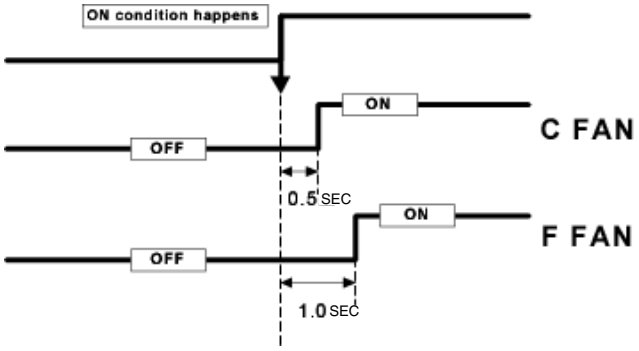

Downloaded from www.Manualslib.com manuals search engine

6-14. Control Function for Lamp inside of Refrigerator

■ Common to all Models

Input For	Control For
1. F-Door 2. R-Door 3. Home bar Door	1. F/R-LED Lamp

Contents

1. R-room LED lamp control
(1) R-lamp becomes on/off immediate after receiving open & close signal from R-door switch.
(2) But, R-lamp becomes off 10 minutes later when open condition continues even if it does not receive close signal after receiving open signal from R-door switch.
(3) When receive signal more than 1 hour of continuous open, "dR" error displays and function relating to door switch sensing is deleted.

2. F- Room LED lamp control
(1) F-lamp becomes on/off immediate after receiving open & close signal from F- door switch.
(2) But, F-lamp becomes off 10 minutes later when open condition continues even if it does not receive close signal after receiving open signal from F-door switch.
(3) When receive signal more than 1 hour of continuous open, "dF" error displays and function relating to door switch sensing is deleted.

3. R-room LED lamp control by home bar
(1) R-lamp becomes on/off immediate after receiving open & close signal from home bar door switch.
(2) But, R-lamp becomes off 10 minutes later when open condition continues even if it does not receive close signal after receiving open signal from home bar door switch.
(3) When receive signal more than 1 hour of continuous open, "dH" error displays and function relating to door switch sensing is deleted.

6-15. DEMO function

■ Common to all models

Input for	Control for
1. Adjust Refrigerator Button 2. Adjust Freezer Button	1. Comp 2. F-Fan

Contents

1. Operating method
■ FRY-601 Adjust refrigerator + press ice selection button for 5 times.
■ FRX-622B Adjust refrigerator + press adjust freezer button for 10 times.

2. Control method
(1) All electrical goods become off.
(2) But, F-Fan becomes on when Freezer & Refrigerator door is opened.
Door open -> Fan on / Door close -> Fan off
(3) Display : Display temperature per steps of freezer, refrigerator → high speed icon on (→ Water selection icon on → cubed icon on → ice maker lock icon) ← ■ Only applicable to FRY-601 model. (Proceed approx. 3 seconds interval)

3. Release method
(1) Adjust refrigerator + press ice selection for 5 times.
(2) Connect electric source again.

Downloaded from www.Manualslib.com manuals search engine

6-16. light Refrigeration Option

■ Common to all Models

Input For	Control For
J18,J19 (OP1,OP2) of Main PCB	Basic Resistor for R-Sensor “medium” Off point

Contents

1. Adjust R-sensor off point (Max. 3deg down)

2. To make easy of A/S when light refrigeration happens, adjust as follows:
   (1) Resistor(R36) : Basic resistor of R-sensor at normal operation.(31.4K or 32.8K)
   (2) Resistor(R37) : 2K up for basic resistor by cutting J1 when light refrigeration happens. (1.5 deg down)
   (3) Resistor(R38) : 4K up for basic resistor by cutting J1,J2 when light refrigeration happens. (3.0 deg down)

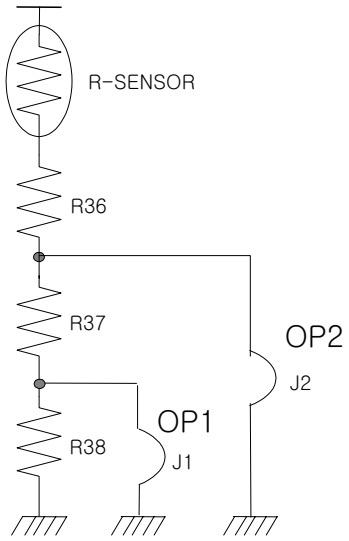

R36 = medium off point
R36 + R37 = medium off point - 1.5 deg
R36 + R37 + R38 = medium off point - 3.0 deg

Downloaded from www.Manualslib.com manuals search engine

6-17. Automatic Ice Maker

■ FRX(Y)-601D/E/F/G (Dispenser Type Model)

Input For	Control For
N/A	Automatic Ice Maker

Contents

1. Ice making flow

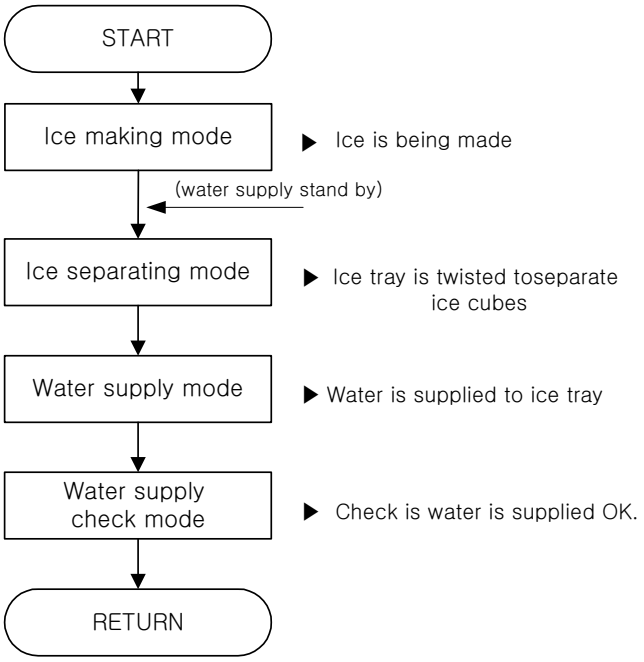

1) Test mode starts when pressing test S/W more than 1 second at ice making ass'y.
   (But 1. Ice separation mode starts first when starting test mode.
   2. Only 1 time of test proceeds when test S/W has disconnection error.)
2) When initial electric source is connected, first level ice shaping plate and then proceed to ice making mode.
3) When released from ice making procedure during ice making flow ice making mode proceeds first.
4) Water supply HTR control – compressor is controlled at same time.
   But, regardless of compressor operation,
   (1) When select ice making stop, ice making mode becomes off unconditionally.
   (2) Water supply hose heater becomes on when sensing under RT15℃.
   (3) When there is water supply error after ice separation, water supply hose heater become operateing for 1 hour.
5) Water supply waiting condition
   ① Condition : When sensing full ice making.
   ② Operation : Proceed to ice making mode among ice making flow.(Stop for ice separation, water supply mode)
   ③ Release : Automatic release when operates at normal condition.

Downloaded from www.Manualslib.com manuals search engine

Contents

2. Ice separating Mode

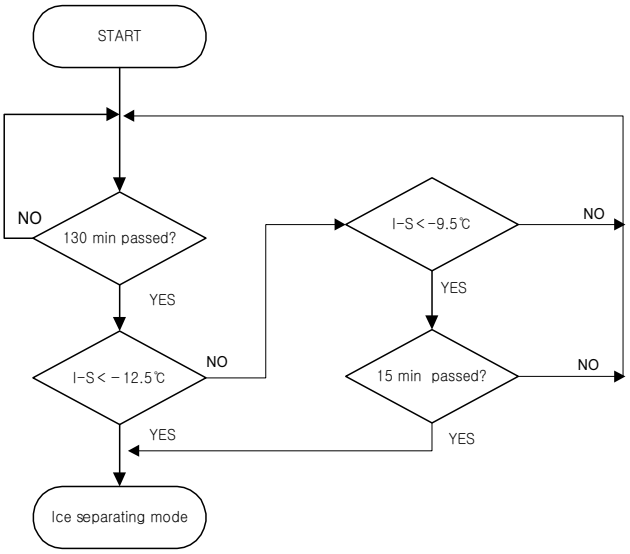

1) When I-S becomes under -12.5 ℃ 70 minute passes by, ice making flow is finished.
2) When I-S does not reach under -12.5 ℃ 70 minutes passed by, but I-S becomes continuously keep under -9.5 ℃ for 15 minutes, ice making flow is finished.
3) When there is I-sensor error, ice making flow is finished 4.8 hr from ice making flow.

3. Ice separation mode

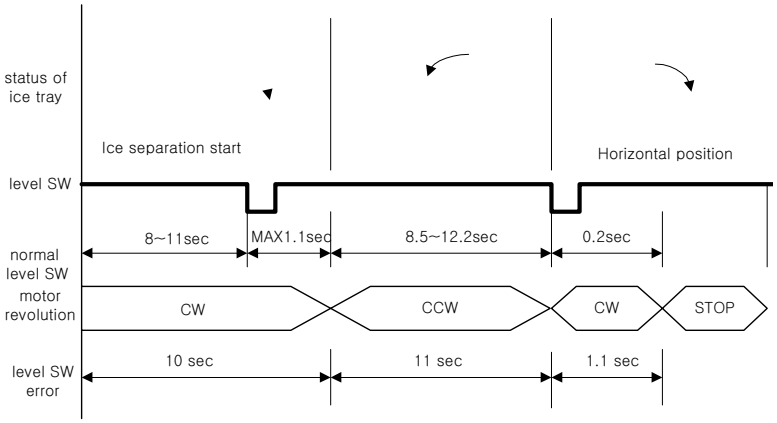

1) Times for each section is used to check level S/W error.
2) Sense ice separation motor rotation for each section.
3) When there is error at level S/W, separation is done by time.
4) When there is motor error for ice separation, it stop at that condition.

Downloaded from www.Manualslib.com manuals search engine

Contents

4. Water Supply Mode

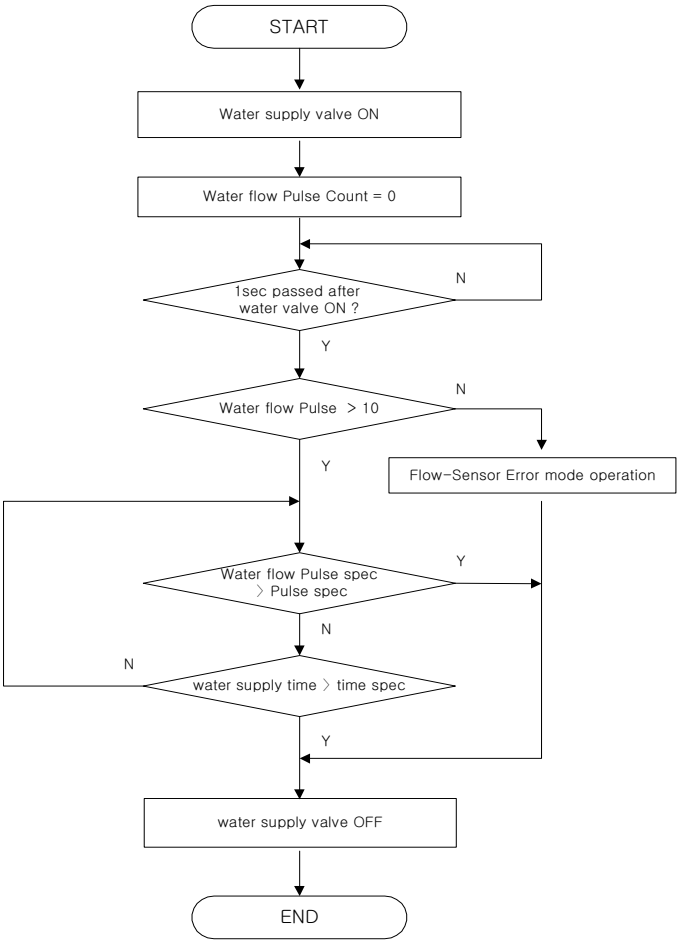

1) Water(Ice) valve becomes on when it goes into water supply mode after ice separation.
2) When there is flow sensor error, water is supplied by time.
- Variables of factor value (Will be used at A/S)
① Flow quantity pulse value is set to 228 when flow sensor is at normal operating condition.
(When supply water by time : Limited water supply time is Max. 15 seconds)
② When there is flow sensor error, water supply time is 5.5 seconds.
3) Off water(Ice) valve.

Downloaded from www.Manualslib.com manuals search engine

Contents

5. Dispenser function

1) Water selection/Ice selection button
① Normal default mode is water selection.
② When pressing water selection/ice selection button, relevant icon becomes on and other icons become off.
③ When pressing dispensing switch at each selected mode, relevant water selection/ice selection is dispensed.
2) Ice making stop button.
① Each time when pressing ice making stop key, ice making stop function & LED becomes on/off.
3) Display
① Normal default mode is water selection LED on.
② When select water selection, ice selection button, relevant LED become light.
(But, when there is disp S/W error during water selection/ ice selection mode, relevant LED becomes blink.)
② When pressing ice making stop button,
Ice making stop LED becomes on and when ice selection LED is on, relevant LED becom off and water selection LED becomes on.
4) Control flow & timing chart

① When select ice selection button

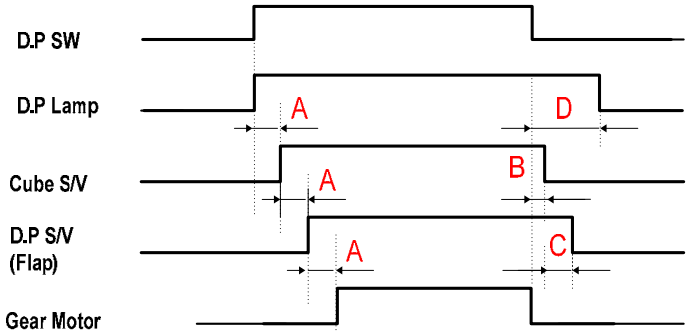

② When select water selection

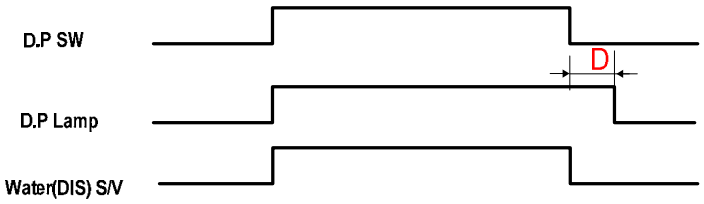

DELAY TIME : A = 0.5s, B = 0.5s, C = 2.0s, D = 5.0s, E = 0.3s

Downloaded from www.Manualslib.com manuals search engine

6-18. Error Display & Control method

■ Common to all Models

Input For	Control For
Freezer Temperature Adjusting Button	88 Display

Contents

1. Entering method ■ 22D/E/F/G :Adjust freezer + press water selection button for 5 times.
   ■ X22B : Adjust Freezer + press Locking button for 5 times.
2. Display method: Displays error code using 88 Seg.
   When press adjust freezer at error display condition, display repeats.
3. Release method: Automatic release after pressing 1 time of Locking button and 4 minutes passed by.
4. Automatic reset becomes when all error codes return to normal condition.
   (But for C1,F3,EF, Et,Eg,EA, Eu etc become reset after reoperation point of relevant electrical goods and after finish cycle)

-Error content and code display method(■ There is no error codes for ice maker and dispenser for FRX-622B model)

ERROR CODE	CONTENTS
F1	F-sensor : disconnection(“Lo”), short(“Hi”)
r1	R-sensor : disconnection(“Lo”), short(“Hi”)
rt	RT-sensor : disconnection(“Lo”), short(“Hi”)
d1	D-sensor : disconnection(“Lo”), short(“Hi”)
dr	R-Door Switch : defective
dF	F-Door Switch : defective
dH	Homebar Door Switch : defective
EI	I-sensor : disconnection(“Lo”), short(“Hi”)
EF	Flow sensor : defective
Et	Horizintal switch : error
Eg	Water supply : error
ES	Micro switch : error
EA	Drop the ice while Et
Eu	Full ice switch : error
C1	Cycle : abnormal or defective
F3	Return after defrosting : abnormal or defective
Co	Display Full Down mode
D2	Display forced defrost mode for A/S

Downloaded from www.Manualslib.com manuals search engine

Contents

5. Control method
1) "F1" Error
① Generating condition : In case for disconnection, short circuit of F Sensor.
② Control method : Operate as follows according to RT-S.
(But, when there is error at same time with RT-S, operates on/off for 25/25 minutes.)
③ Release condition : Automatic release when F sensor is at normal condition.

RT Basis	Under 7℃	~13℃	~19℃	~29℃	~39℃	Over 39℃
RT-S Basis	Under 9℃	~15℃	~21℃	~31℃	~41℃	Over 41℃
On/Off (Min.)	14 / 50	16 / 41	27 / 45	26 / 22	35 / 20	35 / 20

2) "r1" Error
① Generating condition : In case of disconnection, short circuit of R sensor.
② Control method : Operates as follows according to RT-S.
(But, when there is error at same time with RT-S, operates on/off for 3/7 minutes.)
③ Release condition : Automatic release when R sensor is at normal condition.

RT Basis	Under 7℃	~13℃	~19℃	~29℃	~39℃	Over 39℃
RT-S Basis	Under 9℃	~15℃	~21℃	~31℃	~41℃	Over 41℃
On/Off (Min.)	Off	3 / 50	2 / 10	3 / 7	4 / 6	6 / 4

3) "rt" Error
① Generating condition : In case of disconnection, short circuit of RT sensor.
② Control method : Operate with normal condition and delete control condition by RT sensor.
③ Release condition : Automatic release when RT sensor is at normal condition.
4) "d1" Error
① Generating condition : In case of disconnection, short circuit of D sensor.
② Control method : According to 30 minutes of defrost return limit time.
③ Release condition : Automatic release when D sensor is at normal condition.
5) Door Error
- ("dF","dR","dH" display) sense door error for F / R / home bar door.
① Generating condition : When sense continuous door open more than 1 hour.
② Control method : Delete function relating to door S/W sensing.
③ Release condition : Automatic release when sensing close from door S/W.
6) "C1" Error
① Generating condition: When compressor operate continuously more than 3 hours with D sensor temperature is more than -5℃.
② Control method : Normal operation.
③ Release condition : Release when D sensor temperature is under -5℃ with compressor off.

7) "F3" Error
① Generating condition : When defrost return by 60 minutes limit time.
② Control method : Delete pre-cool mode at defrost mode.
③ Release condition : Release when defrost is completed by D sensor.

Downloaded from www.Manualslib.com manuals search engine

Contents

9) "d2" Mode : A/S compulsory defrost mode
① Entering condition – Adjust freezer + press adjust refrigerator button for 5 times.
② Control method : Same as normal defrost mode. (But, start with HTR defrost)
③ Release condition – Automatic release when D sensor temperature is over 13℃.
10) "d3" Mode : Precool compulsory defrost mode
① Entering condition : – Adjust freezer + press water selection/ice selection button for 5 times.
② Control method : Same as normal defrost mode. (Start with precool)
③ Release condition : Connect electric source.
11) El" Error
① Generating condition : In case for disconnection, short circuit of I-sensor.
(But, ice separation stops when sensing full ice making.)
② Control method : Ice separation with 4.8 hour intervals after water selection.
③ Release condition : Automatic release when I-sensor is at normal condition.
12) "Et" Error
① Generating condition : When level switch is error.(When does not sense for a certain time)
② Control method : Control by time. (Skip water selection mode)
③ Release condition : Automatic release when at normal condition.
13) "EF" Error
① Generating condition : When flow-sensor is error. (When pulse is not sensed for a certain time)
When pulse enter under 10 frequency per a second during water supply on.
② Control method : Control by time.
(Control by Pector time stored at EEPROM.)
(Normally supply water for 5.5 seconds.)
③ Release condition : Release when sense as normal condition after water supply mode operates again.
14) "Eg" Error
① Generating condition : Check I-sensor temperature.(5 minutes after water supply), when certain temperature rise is not possible.
② Control method : Normal control
③ Release condition : Automatic release when operates at normal condition.
15) "ES" Error
① Generating condition : When Micro S/W sense more than 1 minute.
② Control method : Stop function of dispenser & crusher.
③ Display method : Blink relevant mode LED.(Water icon)
16) Malfunction of ice separating motor (No relevant display)
① Generating condition : Malfunction of ice separation motor(Ice separation motor does not work) Check by pressing ice maker test S/W.
② Release condition : Change ice separation motor.
17) "Eu" Error
① Generating condition : When full ice making S/W error (When there is no sensing of high/low)
② Control method : Ice separation motor rotates only 90 deg. when separating ice.
③ Release condition : When full ice making S/W is at normal condition.
18) "EA" Error
① Generating condition : When sensing ice separation 3 times with level switch at error condition.
② Control method : Automatic stop of ice maker.
③ Release condition : When connect electric source or press automatic ice maker test SW with level switch is at normal condition.

Downloaded from www.Manualslib.com manuals search engine

6-19. Magic-cool zone Control Function

■ 22E/G (Magic-cool zone Applicable Model))

Input For	Control For
1. R-Fan 2. Magic-cool zone sensor 3. Magic-cool zone 선택Key	1. Magic-cool zone Damper (Heater)

CONTENTS

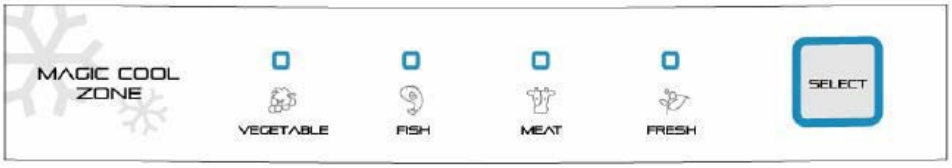

1.When press "select key" of display for each steps and open/close control (Initial value is "Fresh"), it changes "Vegetable"→"Fish"→"Meat" →" Fresh"
When set for each step, relevant LED at left side becomes on.

2. Stepping motor control method
(1) Damper always close when R-damper is opened.
(2) Open/close control is possible according to set step only when R-damper is closed.
(3) Damper is always closed at fresh step.

3. Damper HTR control
(1) When damper is opened, damper HTR becomes off and when damper is closed, damper HTR becomes on.
(2) Damper HTR always off at fresh step.

Step	DAMPER ON/OFF POINT	
	ON	OFF
	Temp (℃)	Temp (℃)
Vegetable	8	7
Fish	4.5	3.5
Meat	3	2
Fresh	–	–

4. Checking method for sensor error and damper open/close condition.
(1) Entering method : Press and hold function key for 3~6 second and then release.
(Entering is not possible when pressing time is below 3 seconds or over 6 seconds.)
① Fresh, meat LED on when sensor is at normal condition and all LED on when sensor is at error condition.
② When press function key 1 time after entering into checking mode, damper is opened compulsory (Fresh, Fish LED ON)

③ When press function key 2 times after entering into checking mode, damper is closed compulsory (Fresh, Vegetable LED ON)
④ When press function key, it repeat as "Sensor error display"→" Open"→" Close" sequence.
(2) Release method : Automatic release 20 seconds after enter into checking mode.

5. When set system off function
1) ALL LED off, damper open, damper HTR off.
2) When it is released, starts operation again.

Downloaded from www.Manualslib.com manuals search engine

6-20. Summary of function buttons

■ Common for all models

CONTENTS

■ 22D/E/F/G : Mode entering method per functions.(All Functions enter form "Locking" condition)

MODE	SBS X600 Inverter Specification
Change Temperature Display	Press and hold more than 10 seconds of Lamp and water selection selection buttons.
A/S Compulsory Defrost	Press Adjust Freezer + Adjust Refrigerator for 5 times
Intermittent Function	Press Adjust Refrigerator + Adjust Freezer + Ice Selection for 5 times.
Freezer Fine Adjustment	Press Ice Selection + Adjust Freezer for 5 times.
Refrigerator Fine Adjustment	Press water selection + Adjust Refrigerator for 5 times.
Demo Function	Adjust Refrigerator + Ice selection for 5 times.
Error Display Function	Adjust Freezer + water selection for 5 times.
EEPROM Clear	Press Refrigerator + water selection for 5 times
Filter Reset Function	(At Locking Release condition) Press and hold for 3 seconds of Lamp/Filter water selection.
Ice Maker Test Function	Press Freezer + Ice selection for 5 times (Press 1 second of Ice Maker Test SW)

■ X22B : Mode operating method per functions (All Functions enter from "Locking" condition)

Mode	Operating method
Compulsory Defrost	Press Adjust Freezer + Adjust Refrigerator for 5 times.
Precool Compulsory Defrost	Press and hold Adjust Freezer + Adjust Refrigerator 10 seconds at same time.
Intermittent Function	Press Adjust Refrigerator + Locking for 10 times.
Freezer Fine Adjustment	Press and hold Adjust Freezer for 10 seconds.
Refrigerator Fine Adjustment	Press and hold Adjust Refrigerator for 10초seconds.
Demo Function	Press Adjust Refrigerator + Adjust Freezer for 10 times.
Error Display Function	Press Adjust Freezer + Locking for 5 times.
EEPROM Clear	Press Refrigerator + Freezer + Locking for 5 times.

Downloaded from www.Manualslib.com manuals search engine

7. MICOM Circuit Explanation

7-1. electric source part (SMPS) circuit

■ Common for all models

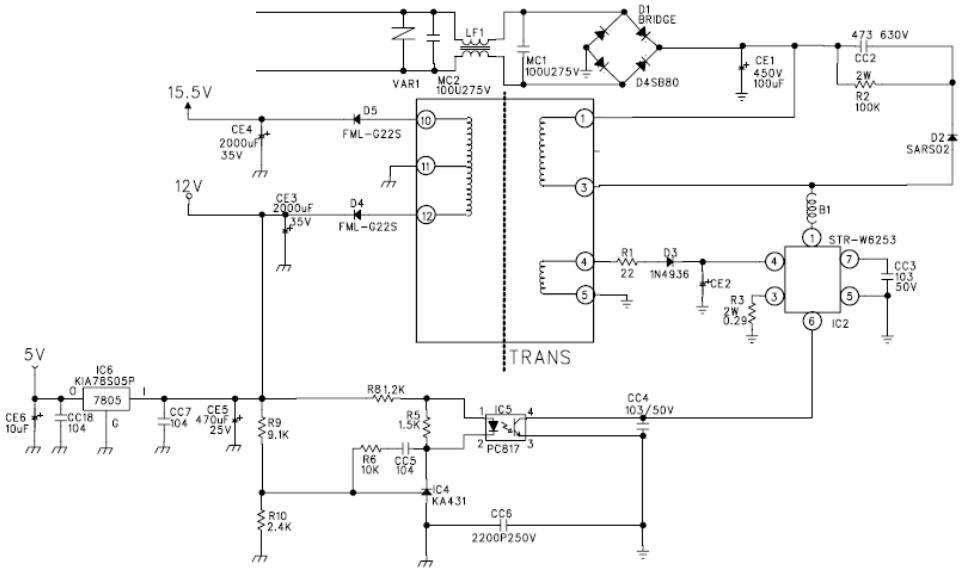

7-2. Sensor part circuit

■ Common for all models

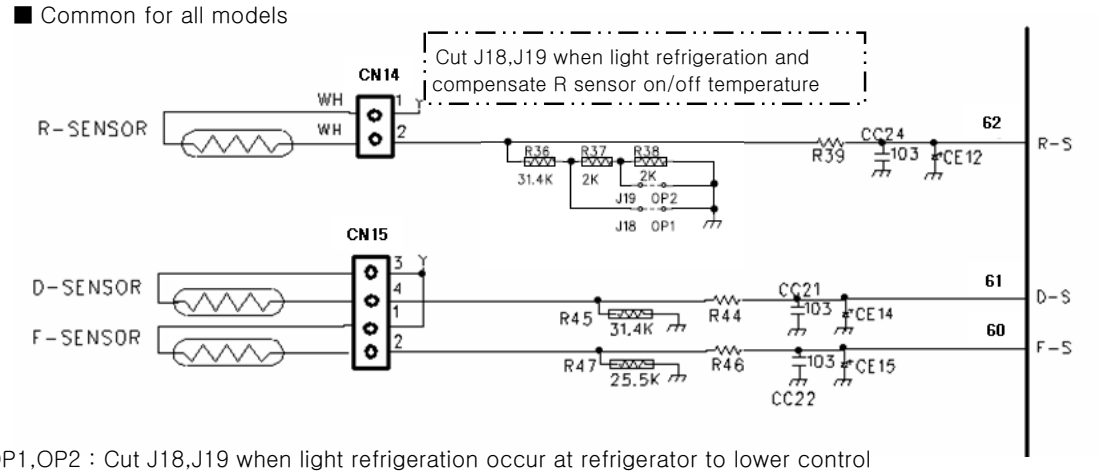

OP1,OP2 : Cut J18,J19 when light refrigeration occur at refrigerator to lower control temperature of Refrigerator.

1) When cut J18, Refrigerator control temperature down to 1.5^{0}C.
2) When cut J18 and J19, Refrigerator control temperature down to 3^{0}C.

Downloaded from www.Manualslib.com manuals search engine

7-3. Relay Operating Circuit & LED Inner lamp Operating Circuit

7-3-1. 22D/E/F/G circuit

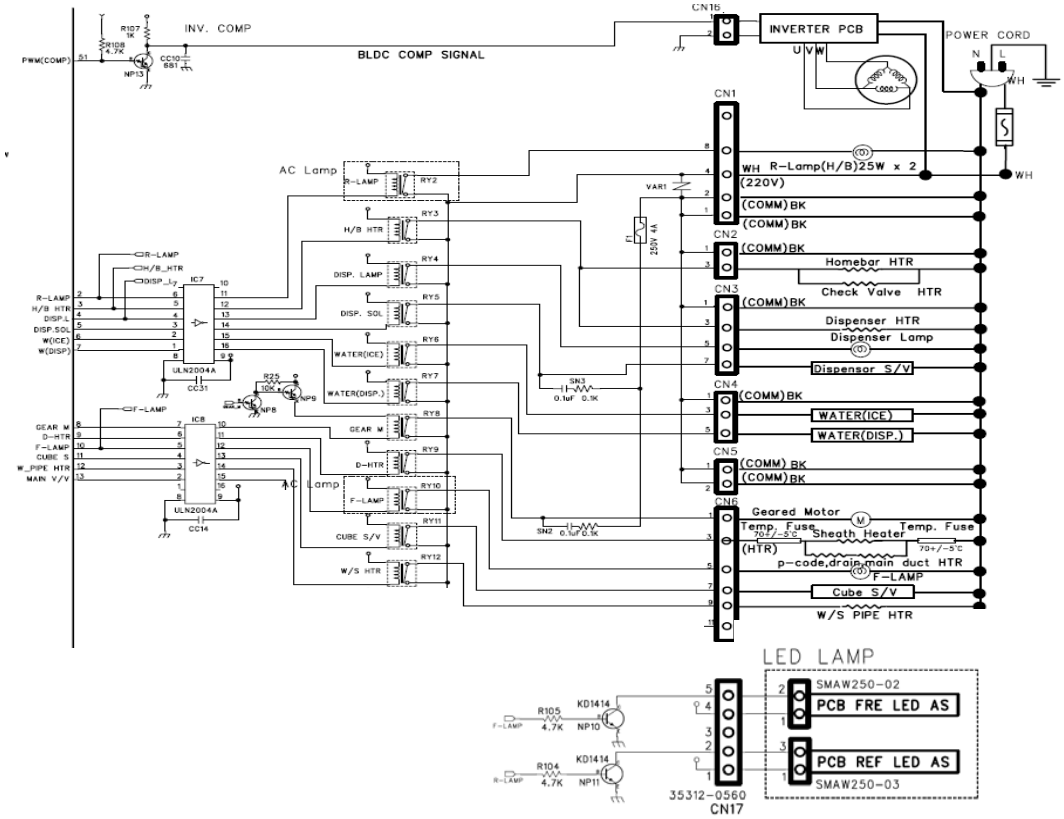

7-3-2. Explanation of 22D/E/F/G/

Control	Control method	Operation (ON) condition		Operation (OFF) condition	
		MICOM PORT	Output PIN	MICOM PORT	IC2 Output PIN
H/BAR HTR	RELAY	3times≒3.7V	12times≒0.7V	3times≒0V	12times≒12V
DISP. Lamp	RELAY	4times≒3.7V	13times≒0.7V	4times≒0V	13times≒12V
DISP. SOL	RELAY	5times≒3.7V	14times≒0.7V	5times≒0V	14times≒12V
WATER(ICE)	RELAY	6times≒3.7V	15times≒0.7V	6times≒0V	15times≒12V
WATER(DISP.)	RELAY	7times≒3.7V	16times≒0.7V	7times≒0V	16times≒12V
GEAR M	RELAY	8times≒3.7V	10times≒0.7V	8times≒0V	10times≒12V
D-HTR	RELAY	9times≒3.7V	11times≒0.7V	9times≒0V	11times≒12V
CUBE S/V	RELAY	11times≒3.7V	13times≒0.7V	11times≒0V	12times≒12V
W/S HTR	RELAY	12times≒3.7V	14times≒0.7V	12times≒0V	13times≒12V
R-LAMP	TR	2times≒3.7V	2 Of CN17 ≒0.7V	2times≒0V	2 Of CN17 ≒5.7V
F-LAMP	TR	10times≒3.7V	5 Of CN17 ≒0.7V	10times≒0V	5 Of CN17 ≒5.7V

Downloaded from www.Manualslib.com manuals search engine

7-3. Relay Operating Circuit & LED Inner lamp Operating Circuit

7-3-1. X22B circuit

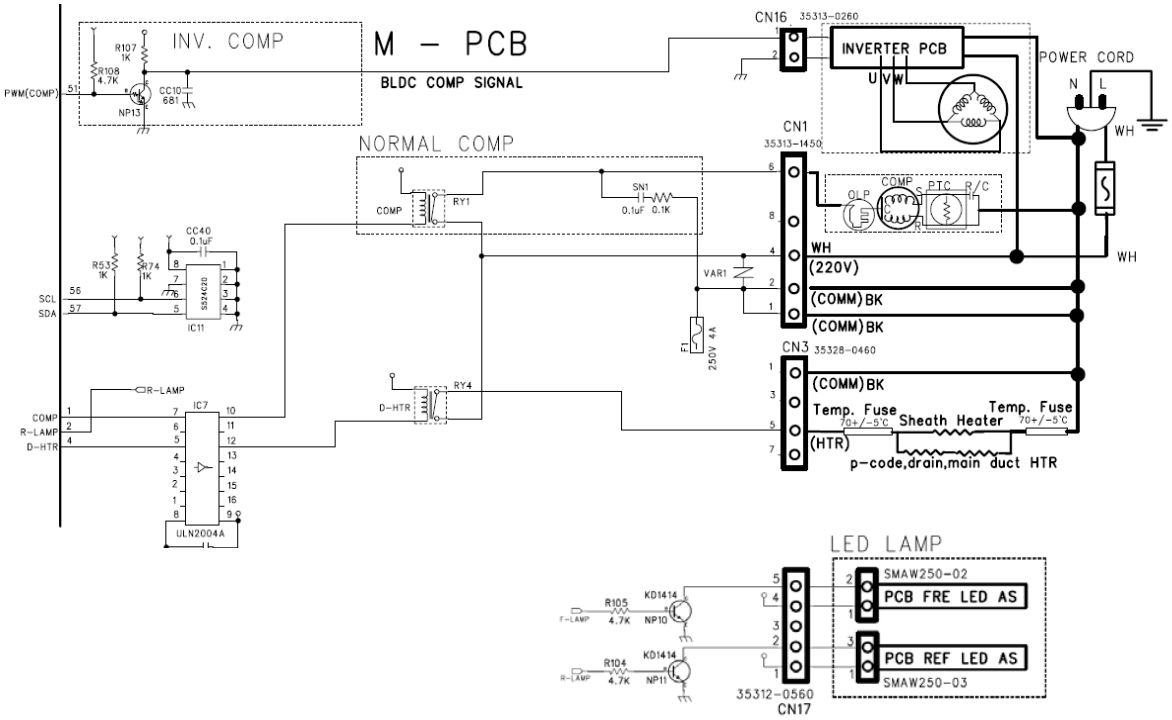

7-3-2. Explanation of X22B Operation

Control	Control method	Operation (ON) condition		Operation (OFF) condition	
		MICOM PORT	Output PIN	MICOM PORT	IC2OutputPIN
D-HTR	RELAY	4times≒3.7V	13times≒0.7V	4times≒0V	13times≒12V
R-LAMP	TR	2times≒3.7V	2 Of CN17 ≒0.7V	2times≒0V	2 Of CN17 ≒12V
F-LAMP	TR	10times≒3.7V	5 Of CN17 ≒0.7V	10times≒0V	5 Of CN17 ≒12V

Downloaded from www.Manualslib.com manuals search engine

7-4. Fan Driving

7-4-1. Circuit

■ Common for all models

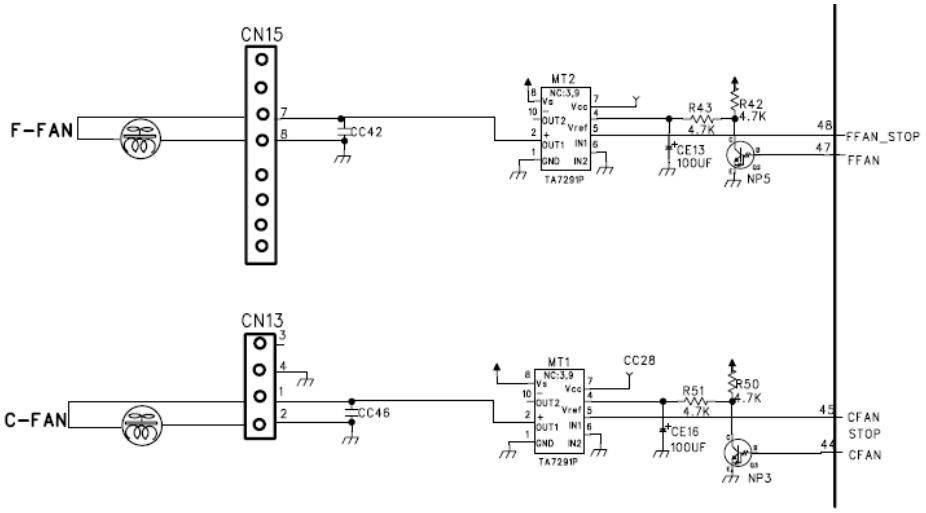

7-4-2. Explanation of operation

(1)TA7291P is IC for DC MOTOR DRIVE and is used for control of FAN MOTOR
(2) And is used for control FAN MOTOR with 1 input end & 1output end.

Input	Output	Remarks
Input 1(Motor IC 5pin)	Output 1(Motor IC 2pin)	
1	H	Forward Direction
0	L	STOP

Downloaded from www.Manualslib.com manuals search engine

7-5. Main PCB circuit

■ 22D/E/F/G (Dispenser Type Model)

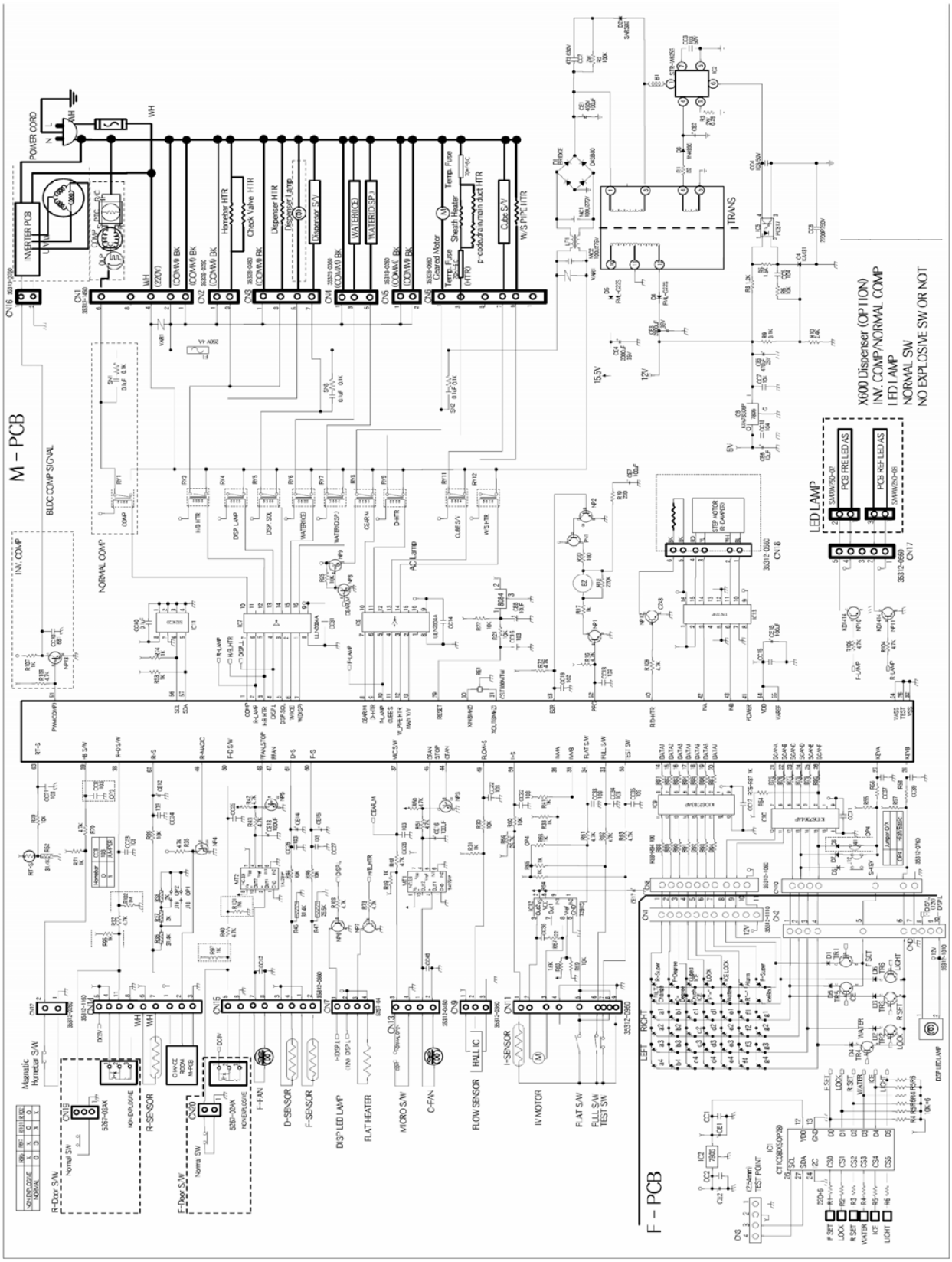

Downloaded from www.Manualslib.com manuals search engine

■ X22B (General Type Model)

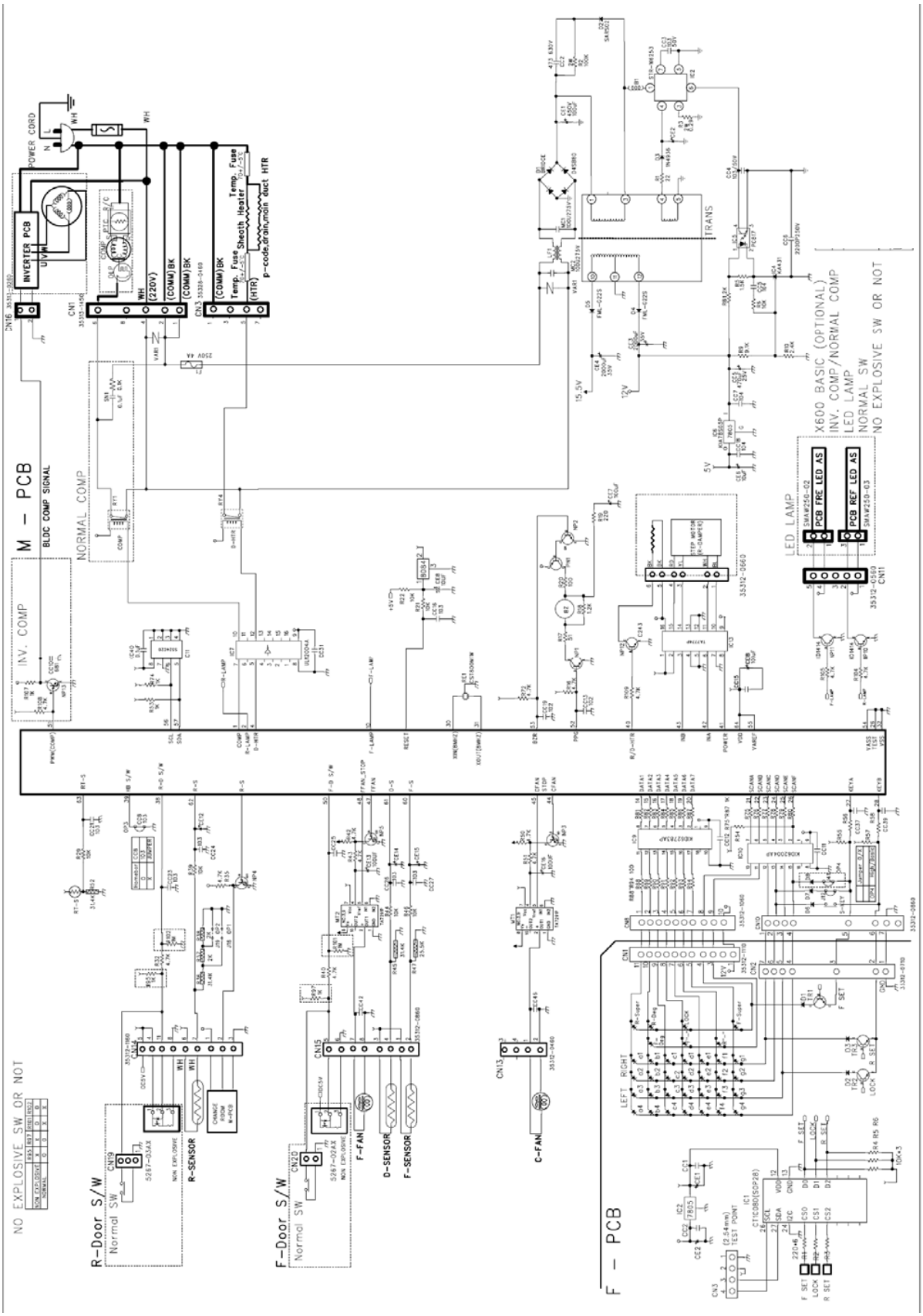

Downloaded from www.Manualslib.com manuals search engine

7-6. Temperature Display Value for R/F Sensor

■ X22B. 22D/E/F/G

(RBasis:31.4K, FBasis:25.5K)

R / D -Sensor				F-Sensor			
Temp.	Basis(kΩ)	Temp.	Basis(kΩ)	Temp.	Basis(kΩ)	Temp.	Basis(kΩ)
-30.0	129.30	0.5	29.34	-30.0	39.652	0.5	7.692
-29.5	125.90	1.0	28.71	-29.5	38.495	1.0	7.508
-29.0	122.50	1.5	28.08	-29.0	37.375	1.5	7.328
-28.5	119.30	2.0	27.47	-28.5	36.291	2.0	7.153
-28.0	116.20	2.5	26.88	-28.0	35.242	2.5	6.983
-27.5	113.20	3.0	26.30	-27.5	34.227	3.0	6.818
-27.0	110.20	3.5	25.74	-27.0	33.240	3.5	6.656
-26.5	107.40	4.0	25.19	-26.5	31.372	4.0	6.500
-26.0	101.60	4.5	24.65	-26.0	30.926	4.5	6.347
-25.5	101.90	5.0	24.13	-25.5	30.480	5.0	6.198
-25.0	99.30	5.5	23.62	-25.0	29.616	5.5	6.054
-24.5	96.70	6.0	23.12	-24.5	28.780	6.0	5.913
-24.0	94.30	6.5	22.63	-24.0	27.970	6.5	5.776
-23.5	91.90	7.0	22.15	-23.5	27.185	7.0	5.642
-23.0	89.60	7.5	21.69	-23.0	26.425	7.5	5.512
-22.5	87.30	8.0	21.24	-22.5	25.686	8.0	5.386
-22.0	85.10	8.5	20.80	-22.0	24.974	8.5	5.262
-21.5	83.00	9.0	20.36	-21.5	24.283	9.0	5.142
-21.0	80.90	9.5	19.94	-21.0	23.612	9.5	5.025
-20.5	78.90	10.0	19.53	-20.5	22.963	10.0	4.911
-20.0	76.90	10.5	19.13	-20.0	22.333	10.5	4.800
-19.5	75.00	11.0	18.74	-19.5	21.722	11.0	4.691
-19.0	78.20	11.5	18.35	-19.0	21.130	11.5	4.586
-18.5	71.40	12.0	17.98	-18.5	20.557	12.0	4.483
-18.0	69.60	12.5	17.61	-18.0	20.000	12.5	4.383
-17.5	67.90	13.0	17.26	-17.5	19.460	13.0	4.285
-17.0	66.30	13.5	16.91	-17.0	18.937	13.5	4.190
-16.5	64.70	14.0	16.37	-16.5	18.429	14.0	4.097
-16.0	63.10	14.5	16.26	-16.0	17.937	14.5	4.007
-15.5	61.60	15.0	15.91	-15.5	17.459	15.0	3.918
-15.0	60.10	15.5	15.59	-15.0	16.995	15.5	3.832
-14.5	58.60	16.0	15.28	-14.5	16.545	16.0	3.749
-14.0	57.20	16.5	14.98	-14.0	16.109	16.5	3.668
-13.5	55.90	17.0	14.66	-13.5	15.635	17.0	3.587
-13.0	54.60	17.5	14.39	-13.0	15.274	17.5	3.509
-12.5	53.30	18.0	14.10	-12.5	14.875	18.0	3.433
-12.0	52.00	18.5	13.83	-12.0	14.487	18.5	3.350
-11.5	50.80	19.0	13.56	-11.5	14.111	19.0	3.287
-11.0	49.60	19.5	13.29	-11.0	13.746	19.5	3.217
-10.5	48.70	20.0	13.03	-10.5	13.391	20.0	3.148
-10.0	47.30	20.5	12.78	-10.0	13.047	20.5	3.081
-9.5	46.20	21.0	12.53	-9.5	14.712	21.0	3.015

Downloaded from www.Manualslib.com manuals search engine

R / D-Sensor				F-Sensor			
Temp.	Basis(kΩ)	Temp.	Basis(kΩ)	Temp.	Basis(kΩ)	Temp.	Basis(kΩ)
-9.0	45.10	21.5	12.29	-9.0	12.387	21.5	2.927
-8.5	44.10	22.0	12.05	-8.5	12.072	22.0	2.839
-8.0	43.10	22.5	11.82	-8.0	11.765	22.5	2.829
-7.5	42.10	23.0	11.60	-7.5	11.467	23.0	2.769
-7.0	41.10	23.5	11.37	-7.0	11.176	23.5	2.711
-6.5	40.30	24.0	11.16	-6.5	10.897	24.0	2.655
-6.0	39.30	24.5	10.95	-6.0	10.624	24.5	2.600
-5.5	37.90	25.0	10.74	-5.5	10.358	25.0	2.546
-5.0	37.50	25.5	10.54	-5.0	10.109	25.5	2.493
-4.5	36.70	26.0	10.34	-4.5	9.849	26.0	2.442
-4.0	35.80	26.5	10.14	-4.0	9.605	26.5	2.392
-3.5	35.00	27.0	9.945	-3.5	9.368	27.0	2.343
-3.0	34.30	27.5	9.768	-3.0	9.138	27.5	2.295
-2.5	33.50	28.0	9.586	-2.5	8.913	28.0	2.246
-2.0	32.70	28.5	9.408	-2.0	8.696	28.5	2.202
-1.5	32.00	29.0	9.234	-1.5	8.484	29.0	2.158
-1.0	31.30	29.5	9.063	-1.0	8.277	29.5	2.114
-0.5	30.60	30.0	8.896	-0.5	8.077	30.0	2.072
0.0	30.00			0.0	7.882		

Downloaded from www.Manualslib.com manuals search engine

8. Troubleshooting & Repairing Methods

- Sequence -

8-1. In case electric source is not connected. (Disconnection of freezer, refrigerator inner lamp & F-PCB electric source is dead)

8-2. Freezer/refrigerator is weak in performance.
- 8-2-1. Freezer does not operate / Freezer is weak in performance. (Food stuff become melting / food stuff does not freeze quickly)
- 8-2-2. Refrigerator does not operate / Refrigerator is weak in performance. (Food stuff is not cool / food stuff does not cool quickly)

8-3. Freezer louver becomes freezing.

8-4. Inner lamp is disconnected.
- 8-4-1. Freezer/Refrigerator Inner lamp is disconnected. (LED LAMP)

8-5. In case defrost does not operate.

8-6. Dewdrops inside of refrigerator.

8-7. Vegetable chamber is overcooled.

8-8. Noise
- 8-8-1. Compressor noise.
- 8-8-2. Refrigerant flow noise.
- 8-8-3. Fan noise.
- 8-8-4. Pipe chattering / interference noise.

8-9. Door part
- 8-9-1. Alarm noises continuously when door is closed.

8-10. Adjusting freezer/refrigerator door mismatch.

8-11. Repairing method of refrigerator cycle.
- 8-11-1. Checking method of trouble. (Freezer/refrigerator does not operate)
- 8-11-2. Repairing method per symptom and cautions.
- 8-11-3. Introduction of CYCLE(R-600a) repairing tool set.
- 8-11-4. Parts for repairing CYCLE(R-600a)

Downloaded from www.Manualslib.com manuals search engine

8-1. There is no electric source connected (freezer, refrigerator inner lamp disconnection or F-PCB electric source is dead)

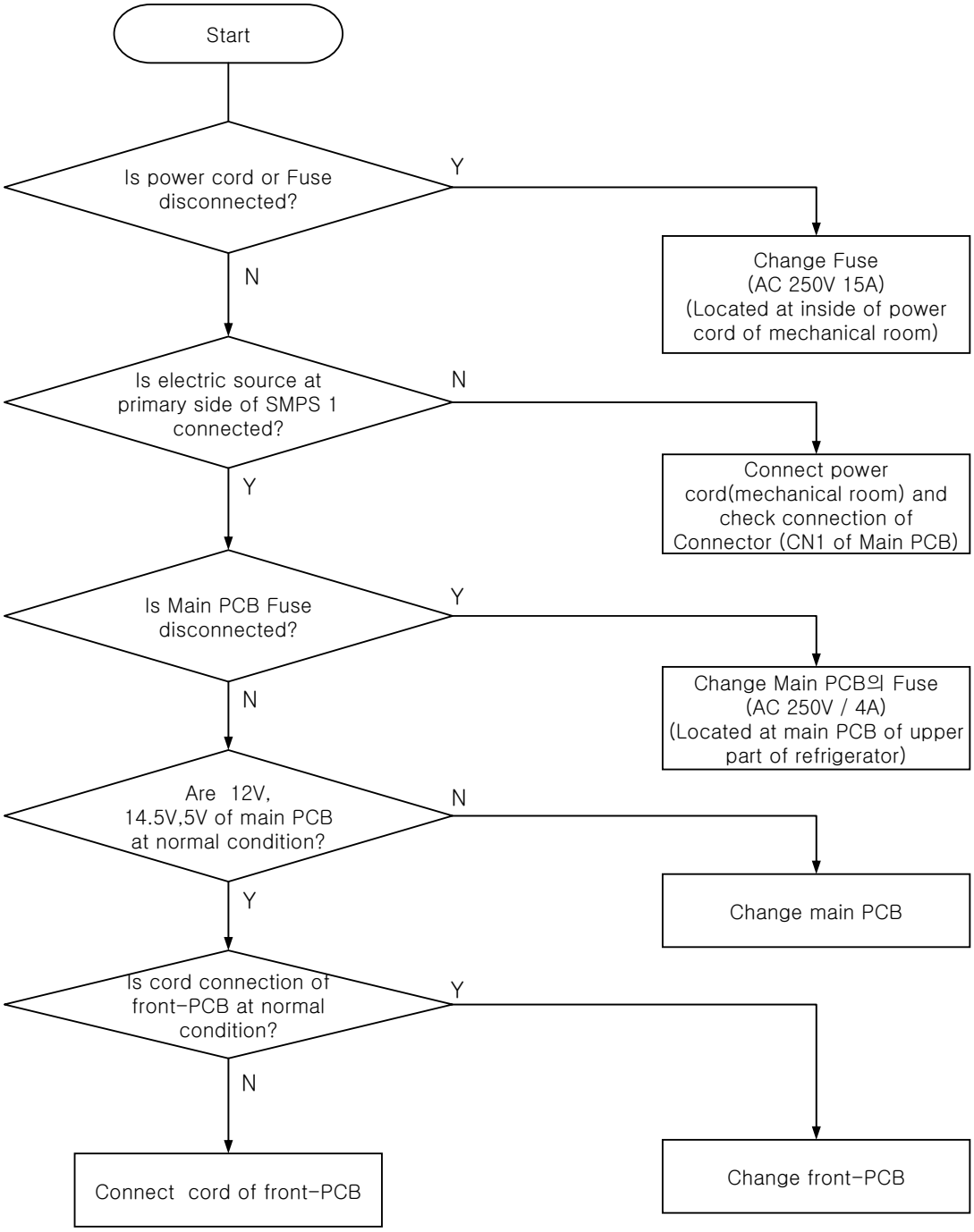

Downloaded from www.Manualslib.com manuals search engine

8-2. Freezer/refrigerator is weak in performance.

8-2-1. Freezer does not operate / Freezer is weak in performance. (Food stuff become melting / food stuff does not freeze quickly)

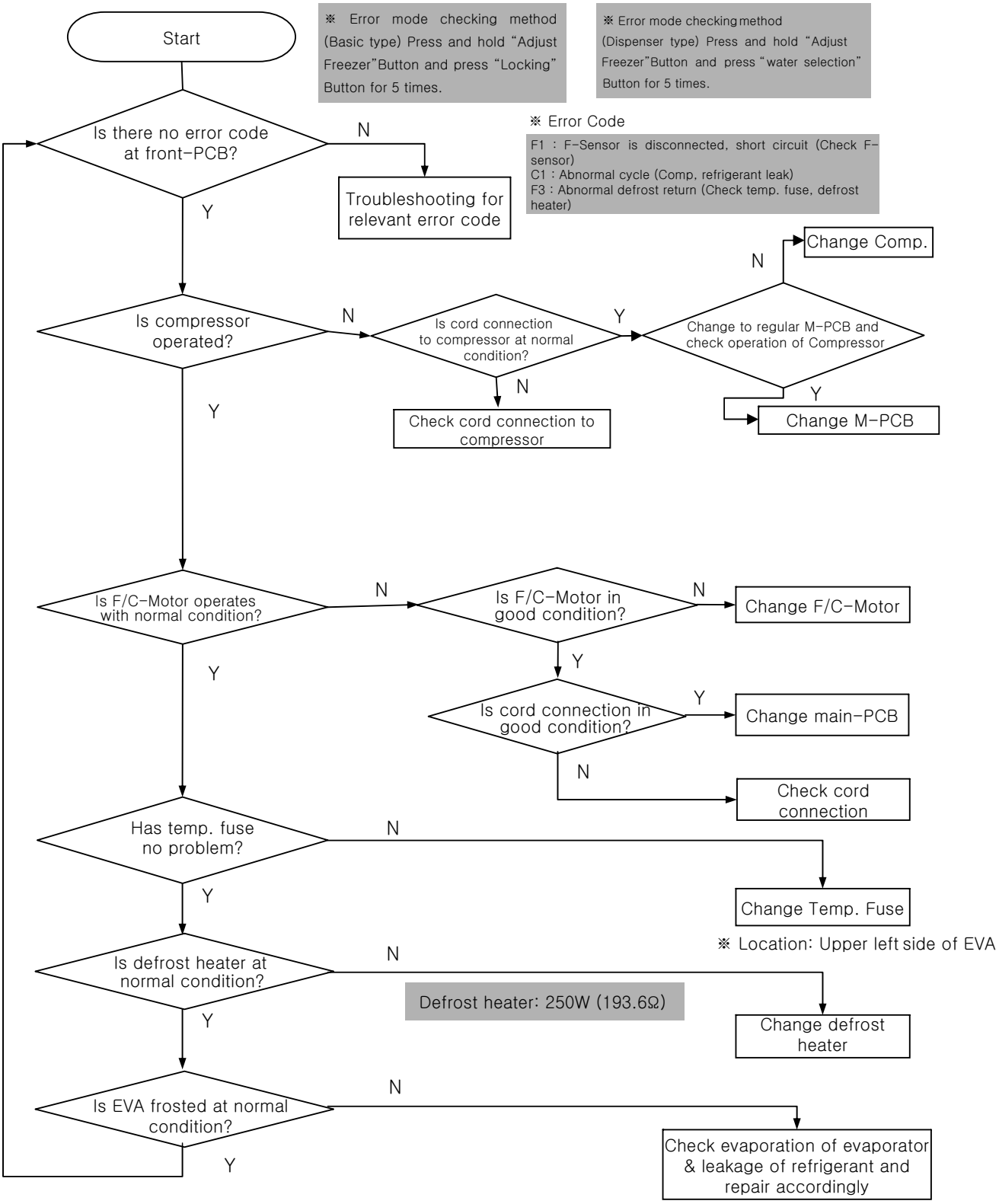

Downloaded from www.Manualslib.com manuals search engine

8-2-2. Refrigerator does not operate / Refrigerator is weak in performance.
(Food stuff is not cool / food stuff does not cool quickly)

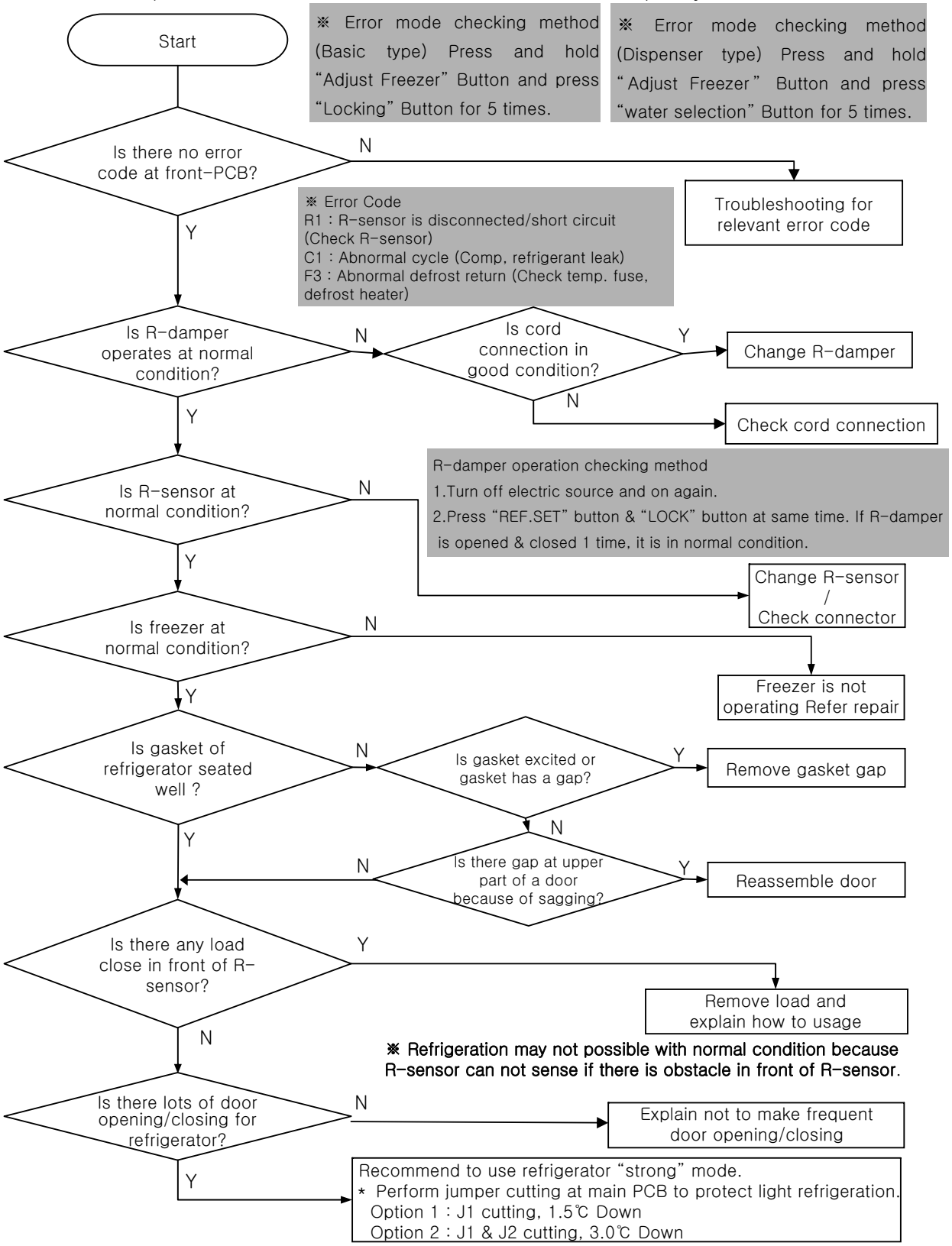

Downloaded from www.Manualslib.com manuals search engine

8-3. Freezer louver becomes freezing.

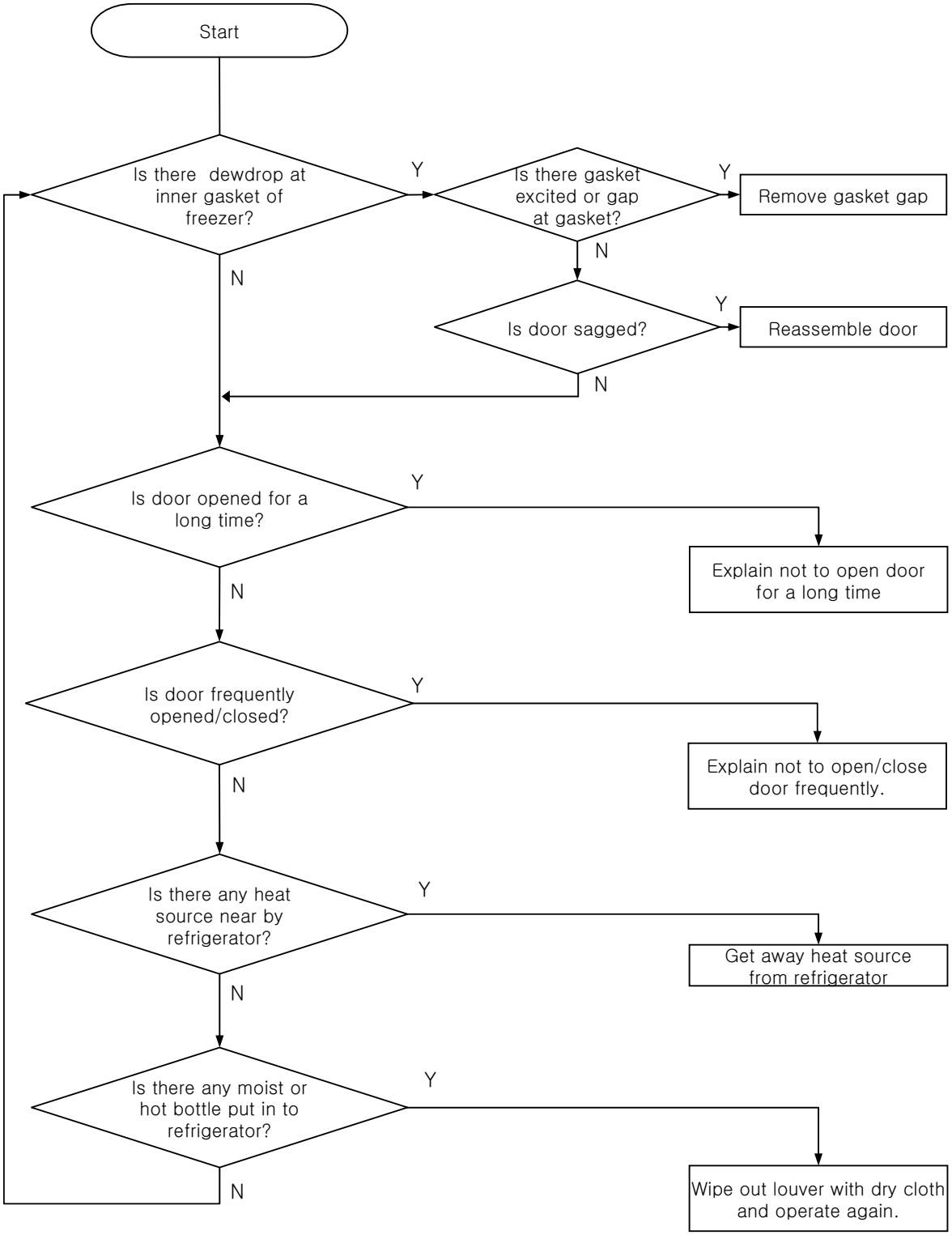

Downloaded from www.Manualslib.com manuals search engine

8-4. Inner lamp is disconnected.

8-4-1. Freezer/Refrigerator Inner lamp is disconnected. (LED LAMP)

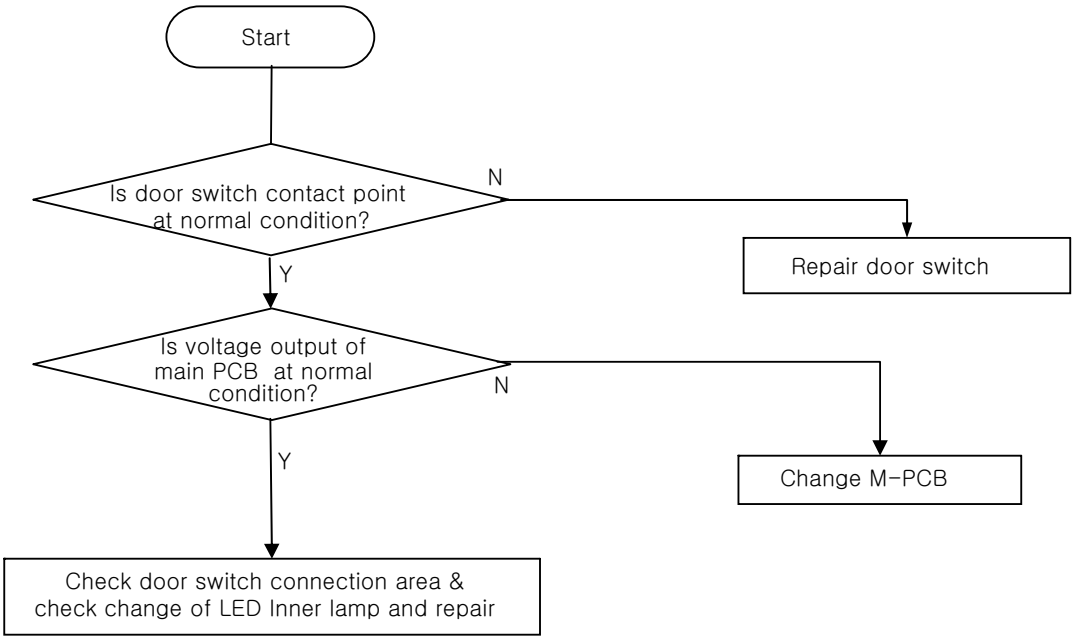

Reference

● Refer inner lamp (LED) & door switch disassembly method

Downloaded from www.Manualslib.com manuals search engine

8-5. In case defrost does not operate.

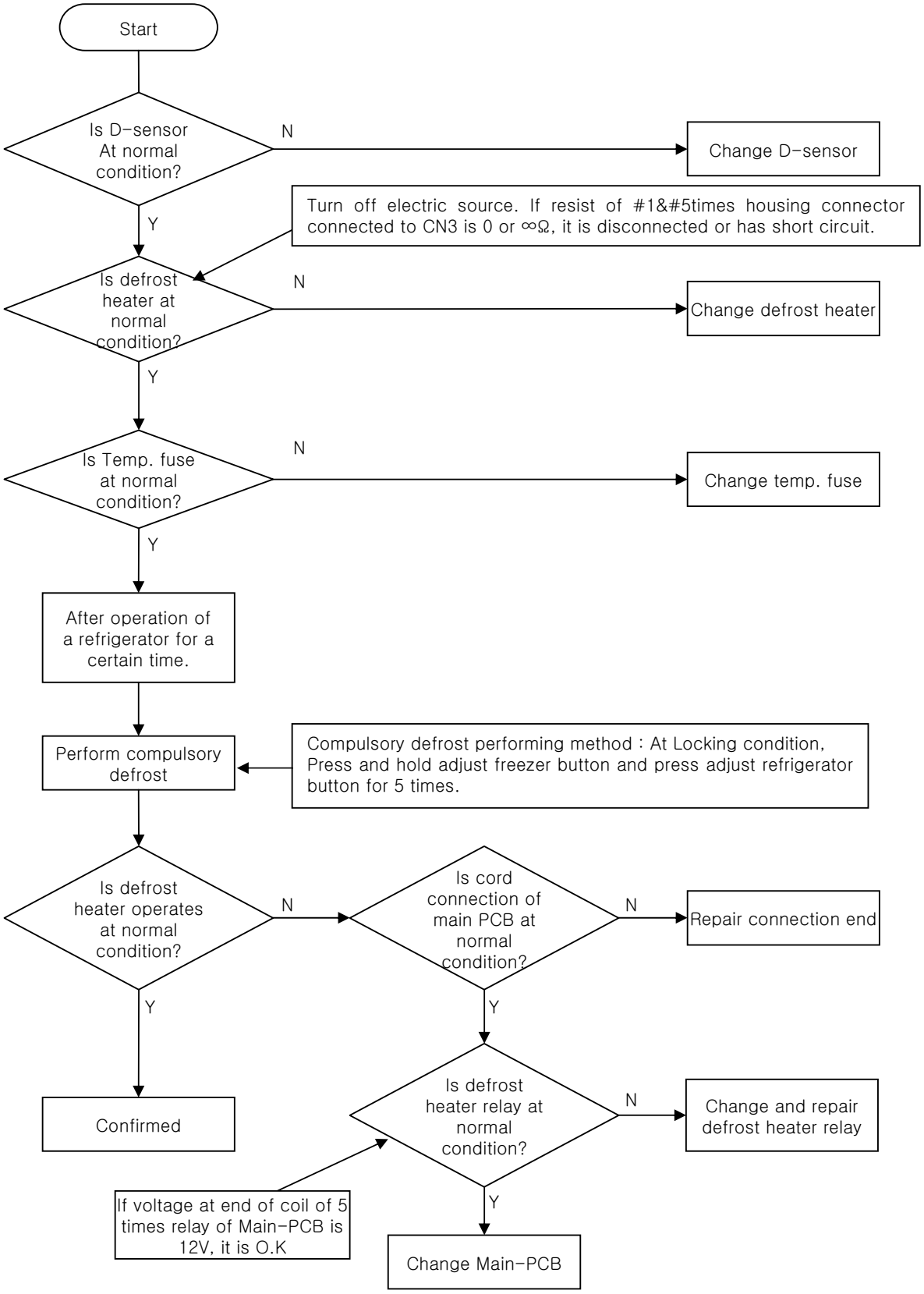

Downloaded from www.Manualslib.com manuals search engine

8-6. Dewdrops inside of refrigerator.

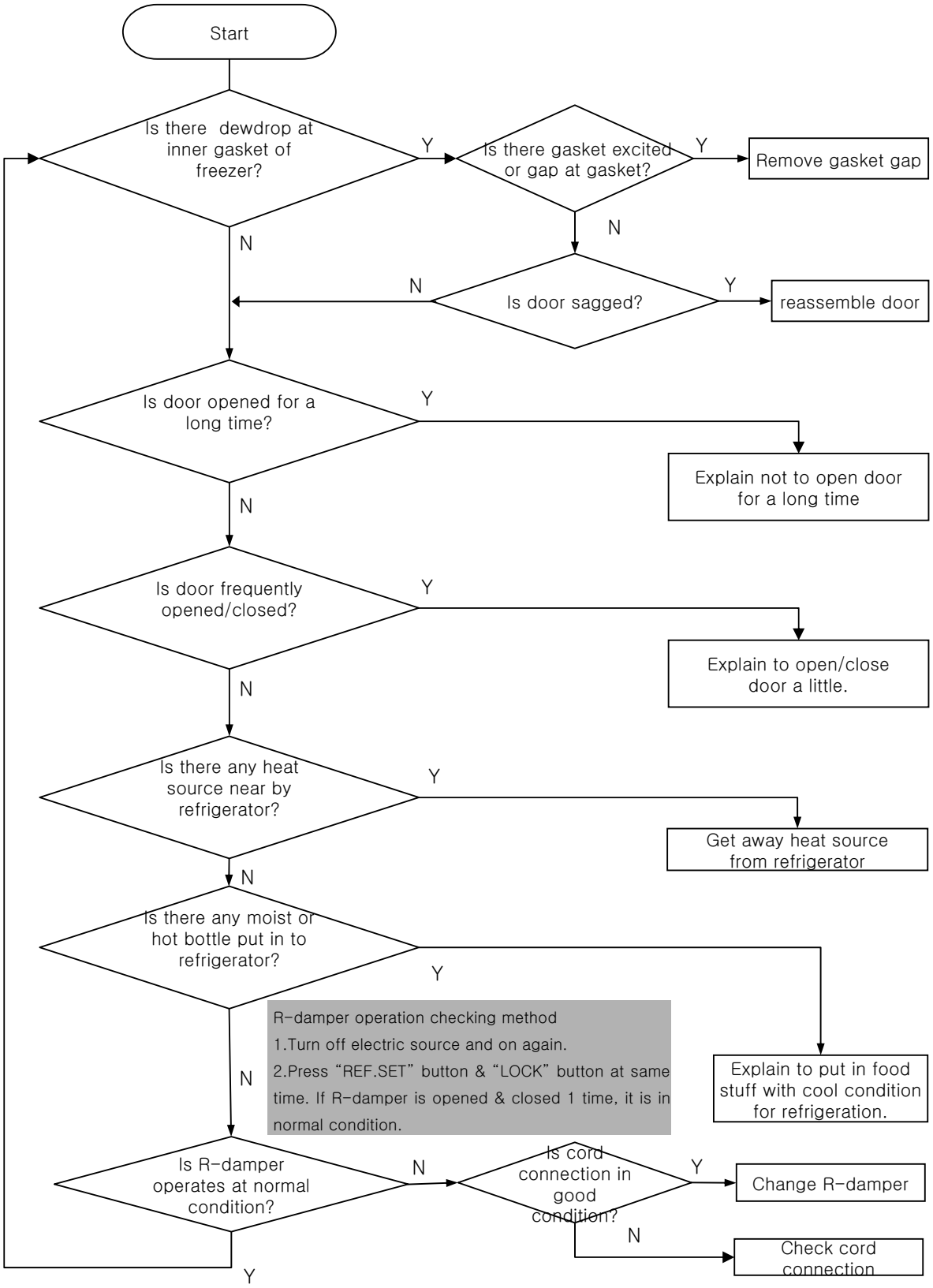

Downloaded from www.Manualslib.com manuals search engine

8-7. Vegetable chamber is overcooled.

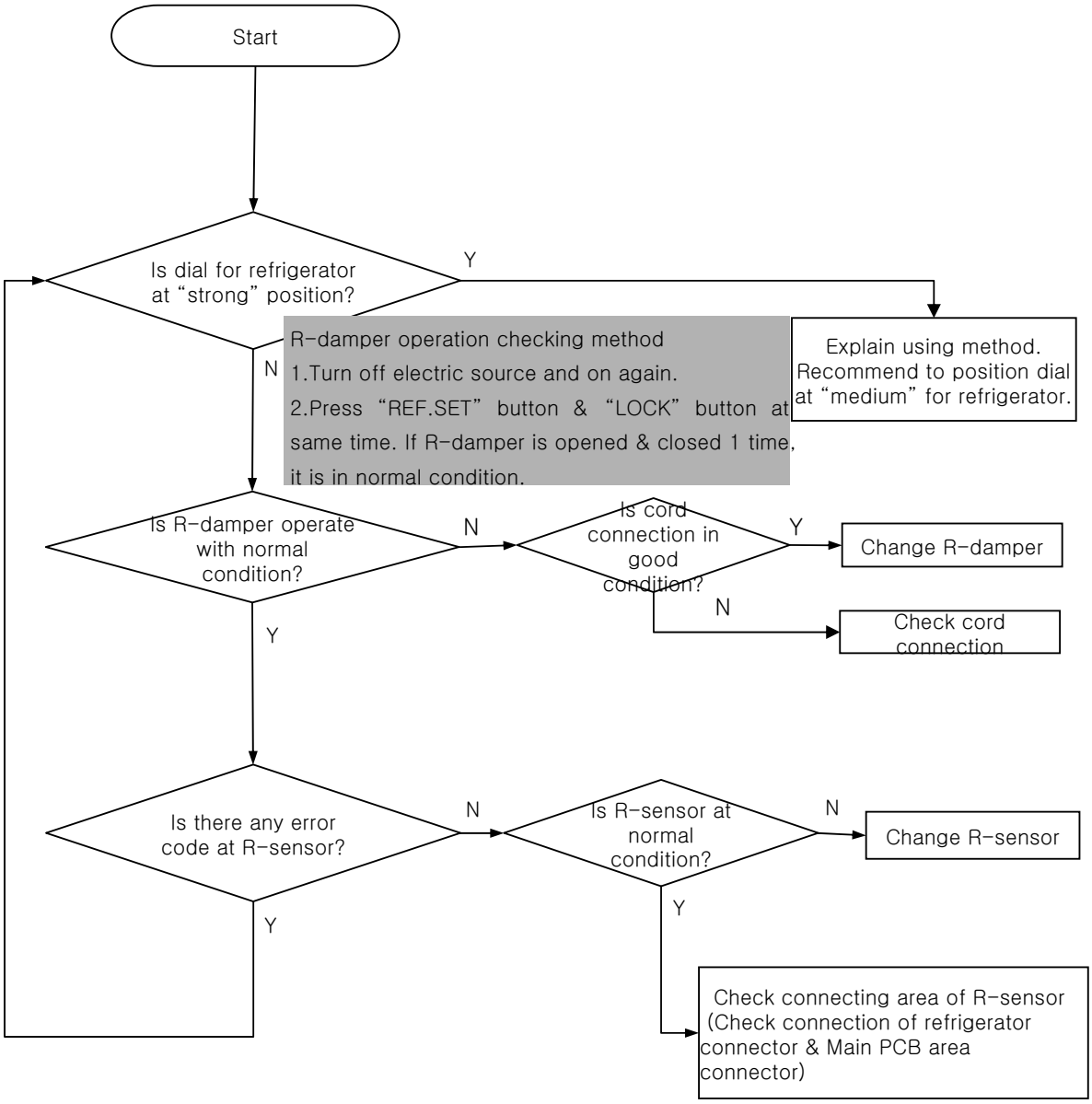

Downloaded from www.Manualslib.com manuals search engine

8-8. Noise

8-8-1. Compressor noise.

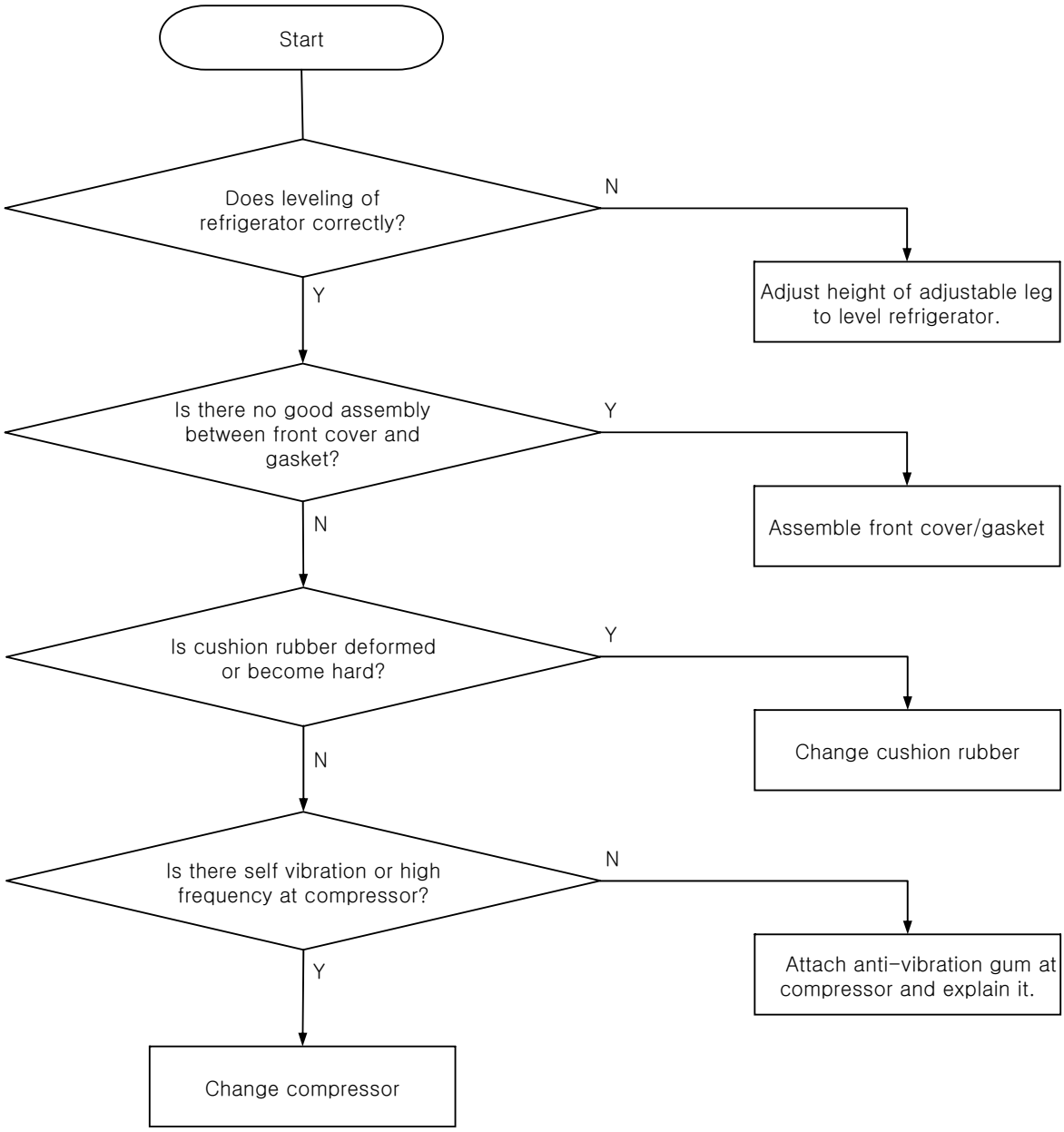

Reference

- There is noise from compressor during operation because compressor operates with high RPM to circulate refrigerant.
- There may thud noise by vibration of motor or piston when compressor starts or finishes operation.

Downloaded from www.Manualslib.com manuals search engine

8-8-2. Refrigerant flow noise.

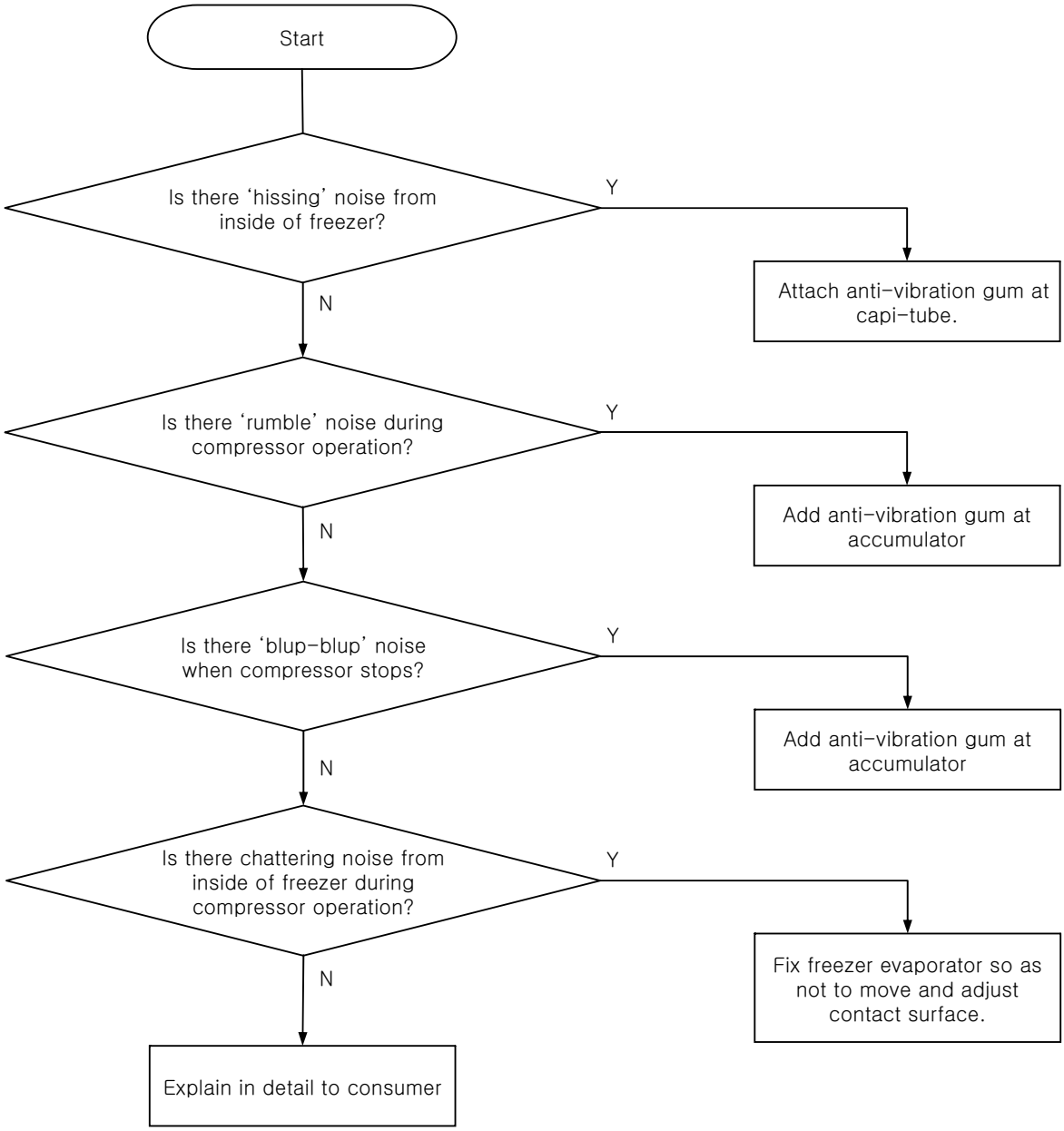

Reference

● It is at normal operation condition when there is flow noise of refrigerant during compressor operation or "blup-blup" noise when compressor stops because it is refrigerator cycle to change refrigerant from fluid to gas.

Downloaded from www.Manualslib.com manuals search engine

Repairing method when there is noise from evaporator.

1. When there is 'hissing' noise from capi-tube:

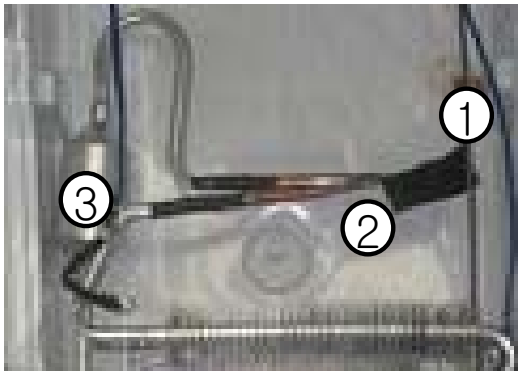

1)'I' tube is used to connect capi-tube and evaporator and there is 2 welding point at ① & ② to connect capi-tube & evaporator.
2) When there is injection noise, attach anti-vibration gum longitudinally so that ①, ② can be wrapped completely.

2. When there is 'rumble' or 'blup-blup' noise from accumulator:
Add anti-vibration gum at ③ area of above picture.

3. When there is chattering noise from evaporator:

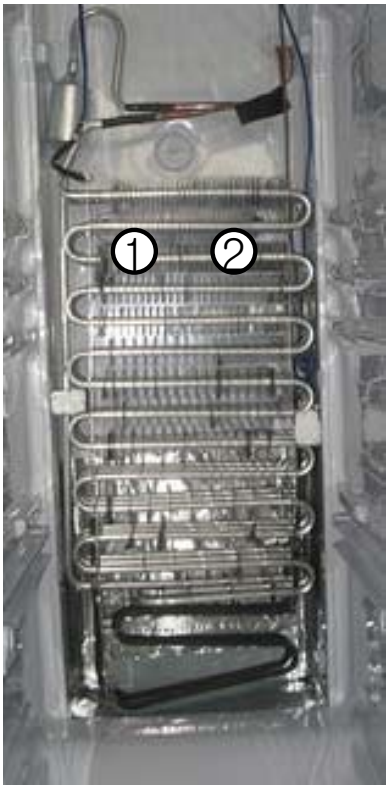

1) There is fixture at ①, ② to fix evaporator. It shall be assembled so as to be closed normally.

2) Fix using styrofoam etc between right/left side of evaporator and inner part so that there is no shaking.

Downloaded from www.Manualslib.com manuals search engine

8-8-3. Fan Noise.

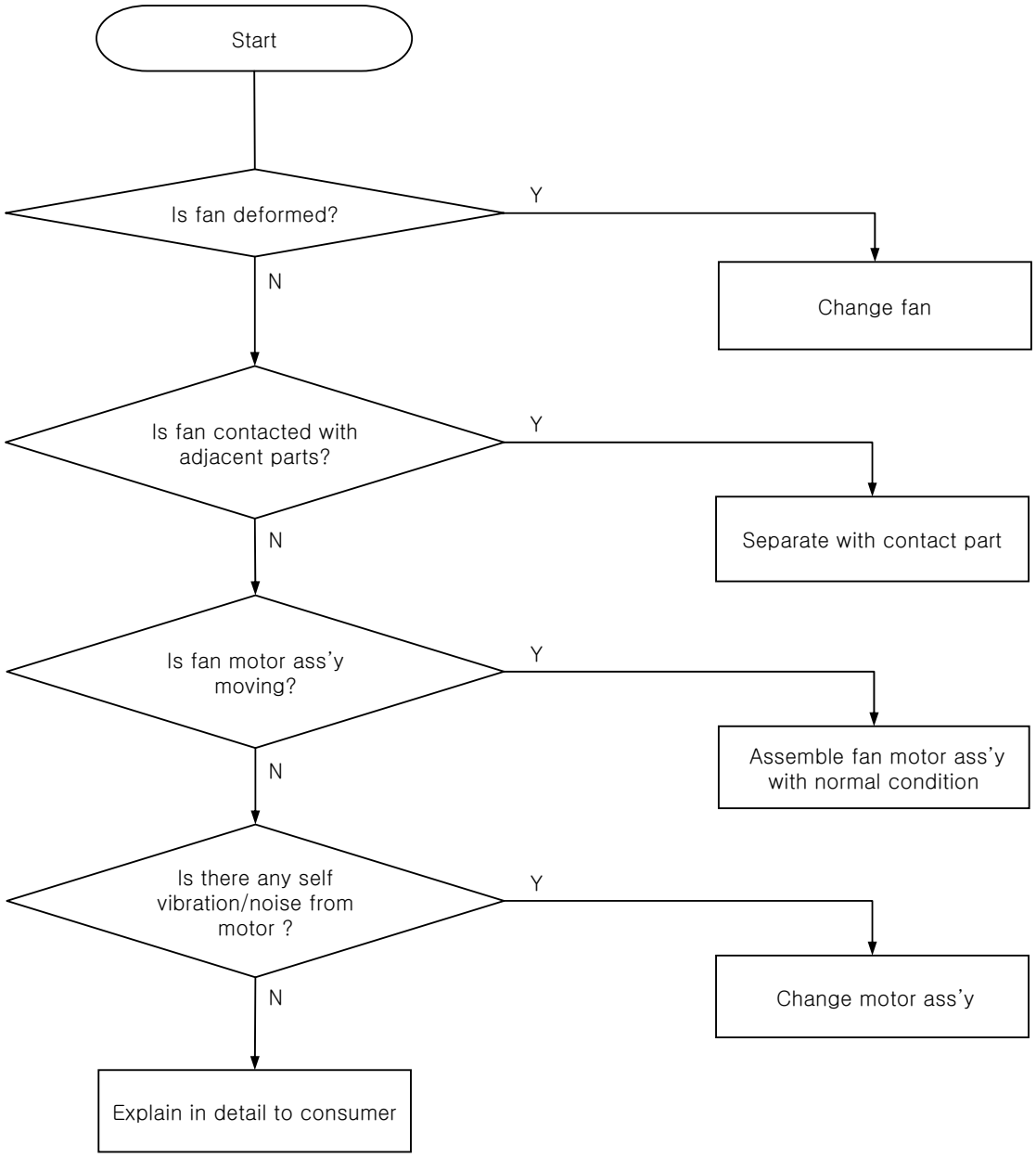

Reference

● Noise from louver or wall is in normal condition because wind coming out from fan to make smooth circulation of cooling air inside of refrigerator.

Downloaded from www.Manualslib.com manuals search engine

8-8-4. Pipe chattering noise / interference noise.

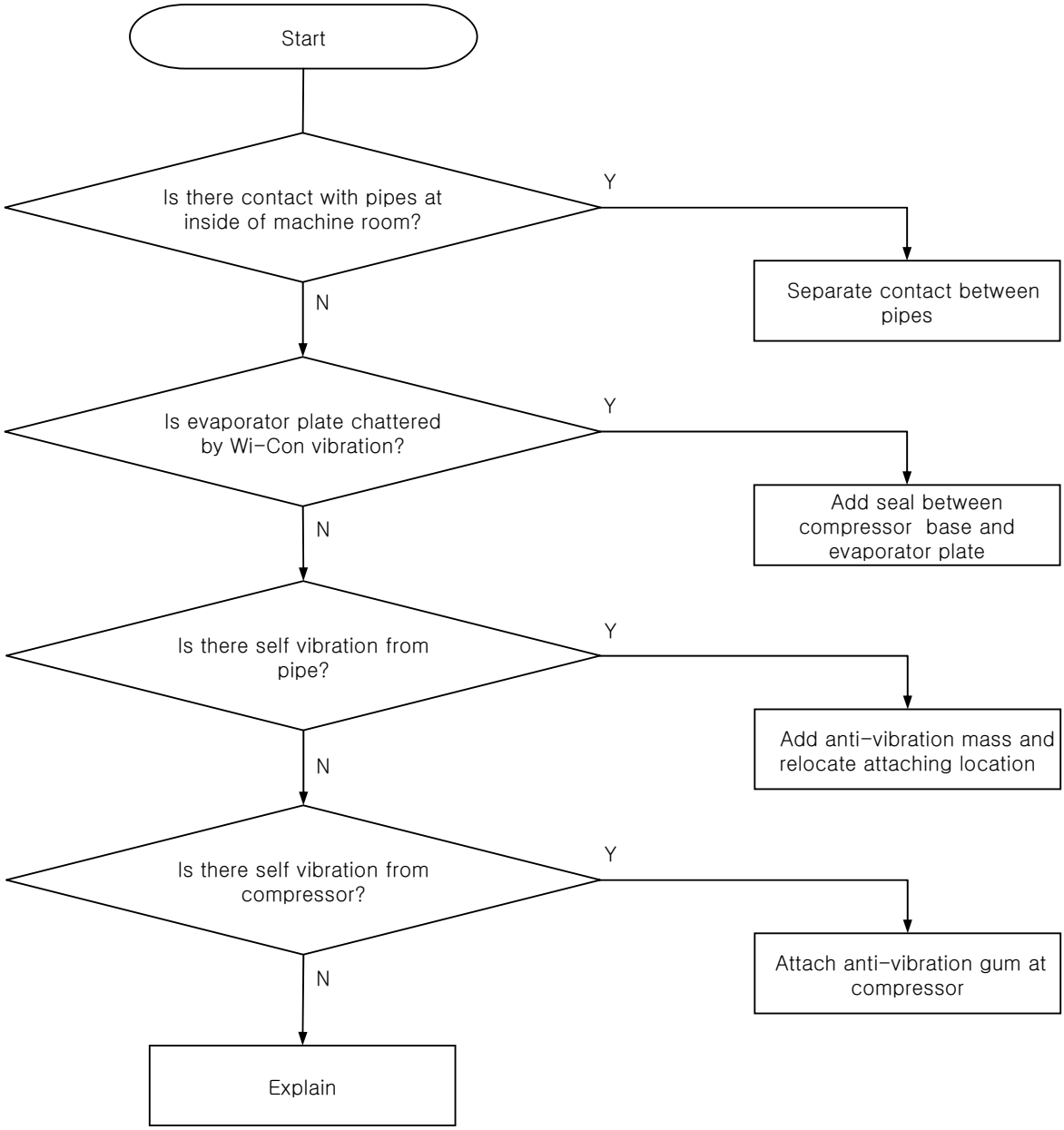

Reference

- There may be vibration from pipes because of discharging of circulating refrigerant by high pressure.
- It is better to attach anti-vibration mass at severe pipe bending area or welding area between pipe and compressor when vibration is transmitted to pipe from compressor.

Downloaded from www.Manualslib.com manuals search engine

8-9. Door part

8-9-1. Alarm noises continuously when door is closed. (Alarm noise with 1 minute interval for 5 minutes)

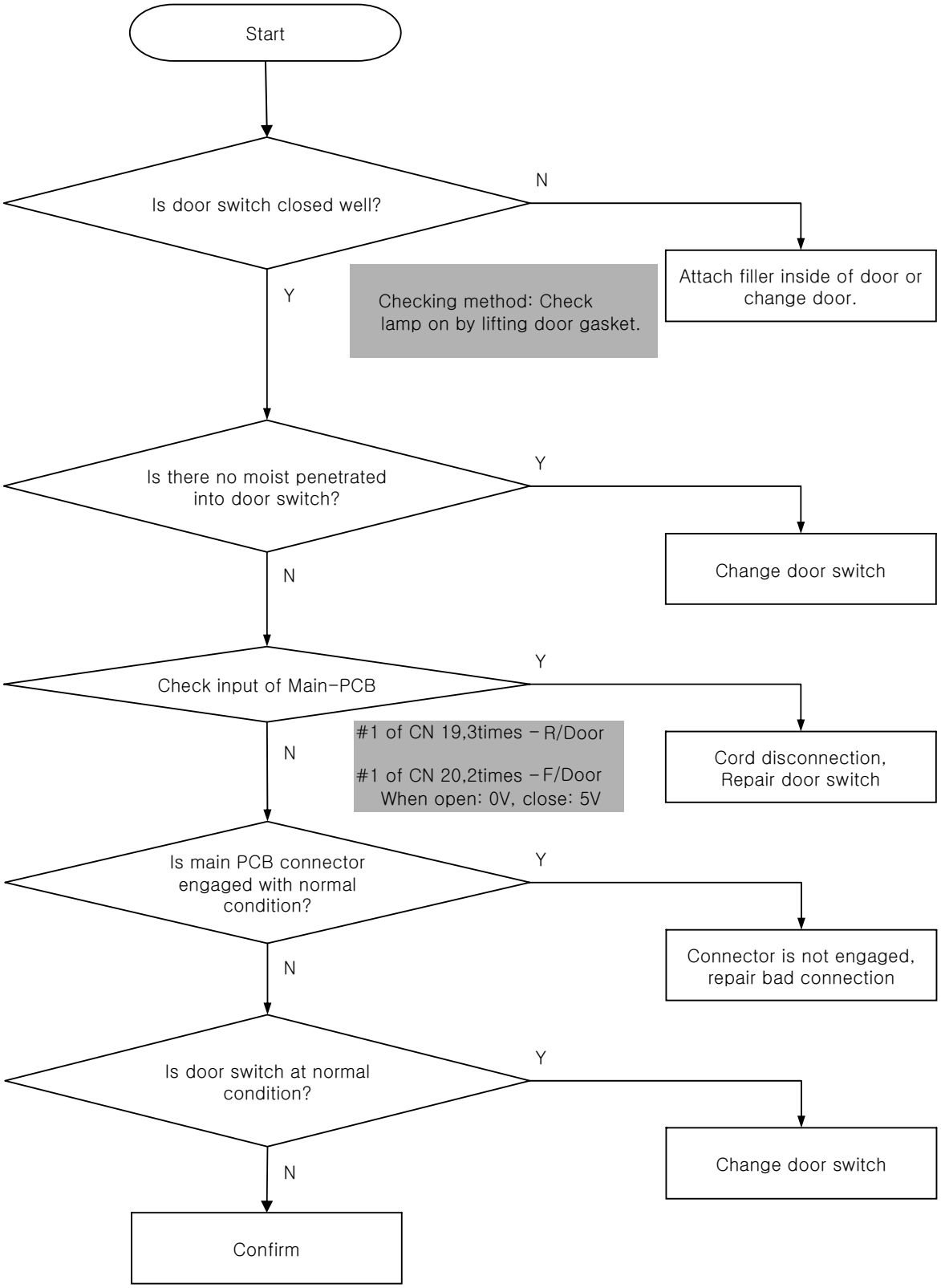

Downloaded from www.Manualslib.com manuals search engine

8-10. Adjusting freezer/refrigerator door mismatch.

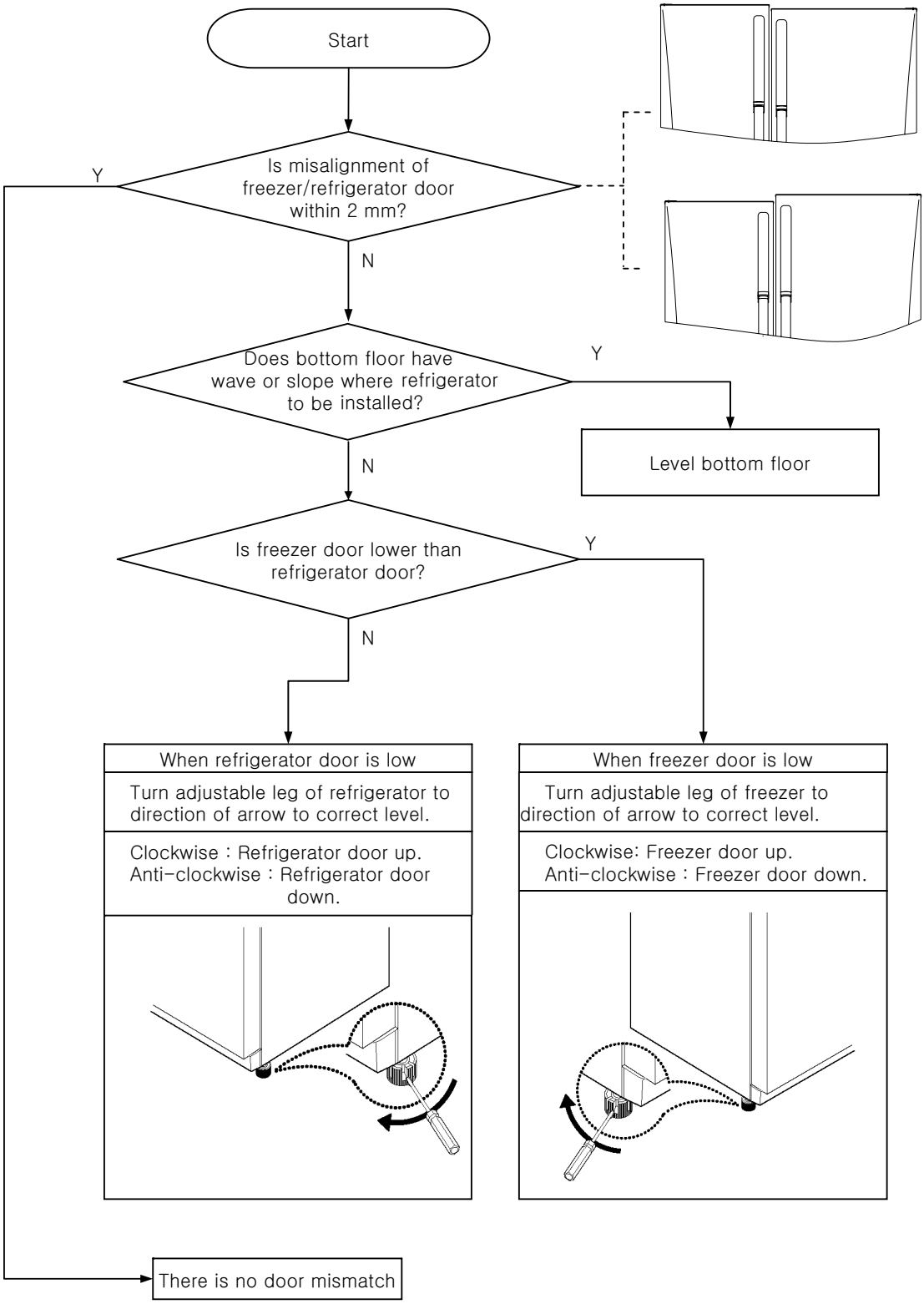

Downloaded from www.Manualslib.com manuals search engine

8-11. Repairing method of refrigerator cycle.

8-11-1. Checking method of trouble. (Freezer/refrigerator does not operate)

1) Check heat radiation from compressor discharge area (aux. comp)during compressor operation.
It depend on condition but shall be higher than surrounding temperature. It is easy to stop operation of compressor and check heat radiation after operating compressor.

When there is no heat radiation, it does not mean only for gas problem, but one of followings:
a) GAS leakage.
b) CYCLE clogged.
c) Malfunction of compressor it self.

2) For the more accurate diagnosis, check temperature of inlet/outlet of radiator during compressor is in operation.
- Normally, inlet temp. of radiator: -25℃↓, outlet temp. of radiator: -20℃↓. (Different according to condition)
When, inlet temp. becomes down but outlet temp. is not down, it means lack of refrigerant due to gas leakage.
But, it need to check whether temp. does not become down even if freezer, refrigerator is operated with"strong", "strong" position fully.

3) When it is decided that there is malfunction according to above checking method, review according to following sequence to make correct repair.

a) Operates compressor for 2~3 minutes and stop operation.
b) Cut outlet capillary tube of a dryer.
When, there is no refrigerant gas injection: CYCLE clogging or gas leakage.
there is refrigerant gas injection : Lack of gas or malfunction of compressor itself.
(Discharge malfunction)
c) Perform nitrogen blowing to check clogging.
(Blowing pressure to be more than 6 kgf/cm2)
Direction of blowing is to blow nitrogen from low pressure side of compressor and check discharge to capillary tube or outlet of hot-pipe.
d) To check malfunction of compressor (Discharge malfunction) itself, operate compressor and check discharge pressure from discharge pipe.
In this case, there shall be over 20 kgf/cm^2(Different in condition) for normal condition.
When there is no pressure gauge available, discharge pressure shall be such as it can not be blocked by hand.
e) To make decision of gas leakage, cut capillary tube at outlet of dryer and when there is no injection of refrigerant, check clogging and if there is no clogging, it is gas leakage.
To find out leakage area, basically it is used leakage inspector before braking cycle (With refrigerant sealed inside) or find out visually by checking oil from pipes or welding area.
After braking cycle, checking is done by using high pressure nitrogen injected inside of cycle to make 0.001kgf/cm^2 pressure and soup bubble.

Downloaded from www.Manualslib.com manuals search engine

8-11-2. Repairing method per symptom and cautions.

1) When there is no problem at temperature control area and freezer & refrigerator does not feel cool at all, it can be considered as gas leakage or malfunction of compressor.
   → When compressor operating continuously more than 2 hours or freezer/refrigerator is out of order for cooling, check gas leakage for pipes and when there is no leakage, it is considered as malfunction of compressor and change compressor.
   But) If high pressure pipe becomes hot so that it can not touch by hand when compressor operates more than 3 minutes, compressor is in good condition.
   → When it does not have above symptom (compression malfunction), find out gas leakage area (Welding area) and perform welding, vacuum and charge gas.
2) Out of ordered compressor.
   ● Operates compressor for under 3 minutes and stop. (Freezer cycle is clogged)
   → Trace clogged area and Disassemble, vacuum, charge gas.
   ● Check connection of electric source (Electronic PCB connection area) and connect it again or fix it completely.
   ● Check connection of electrical parts. (Compressor relay, condenser of PCB side)
   ● When checking compressor motor, check resistor of compressor terminal.
3) Checking method of malfunction of compressor.
   3-1) Connect inverter and compressor.

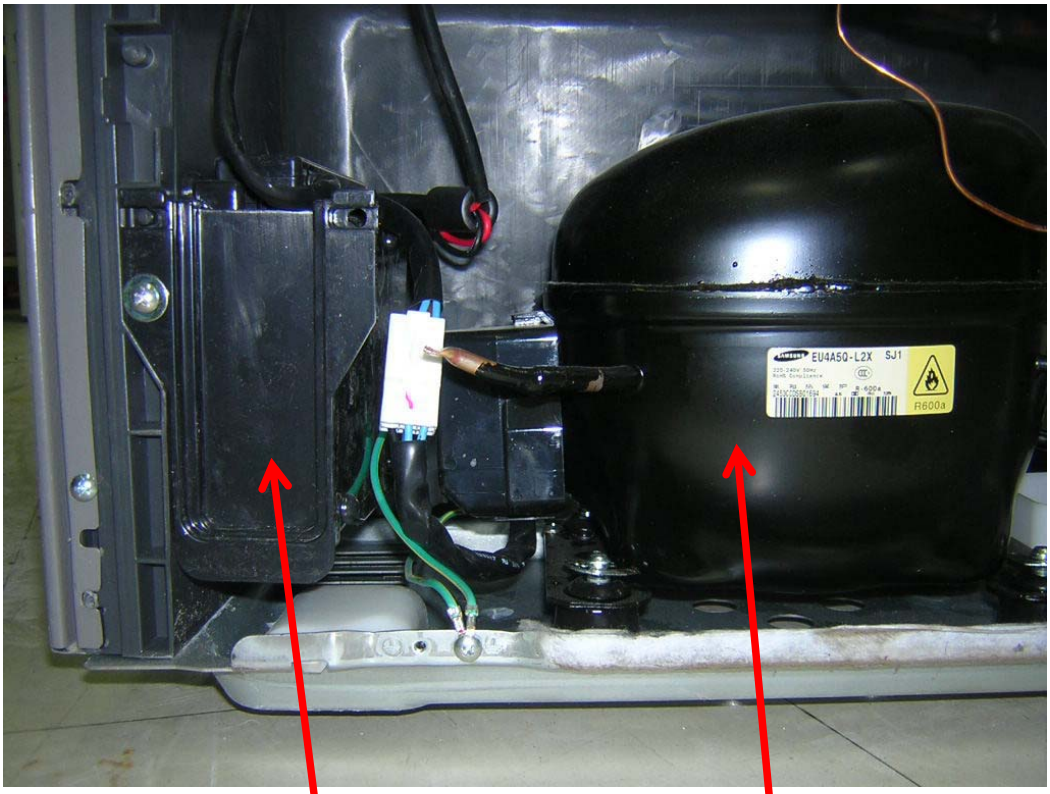

INVERTER BOX

COMPRESSOR

Downloaded from www.Manualslib.com manuals search engine

● Inverter box wire connection

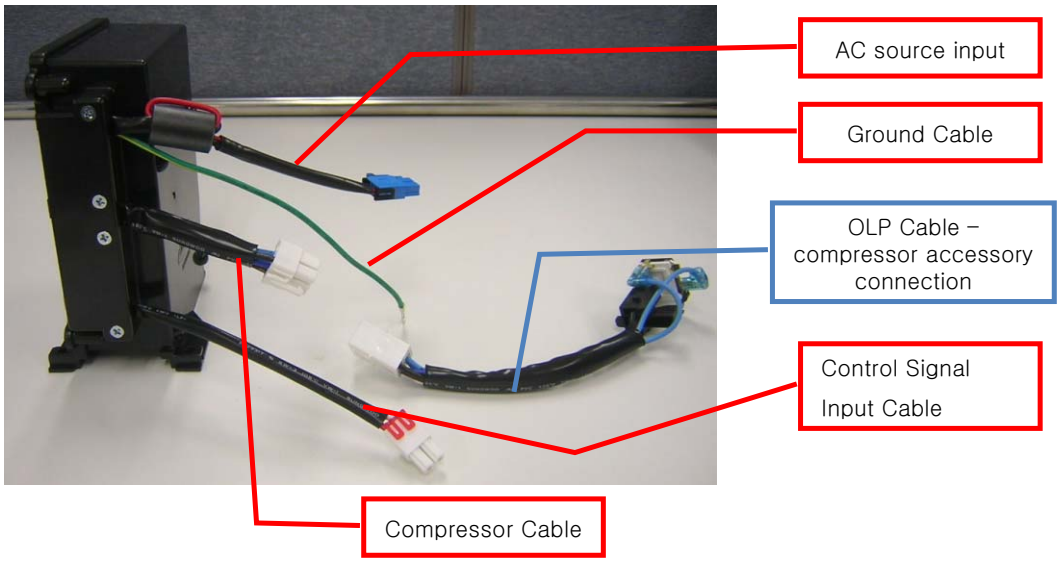

● Connect inverter box and compressor

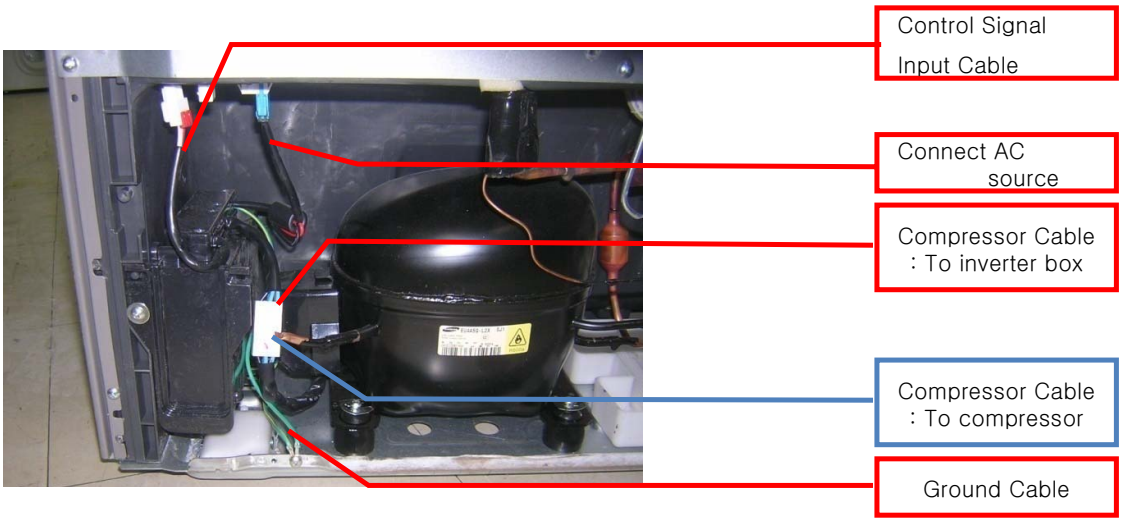

Downloaded from www.Manualslib.com manuals search engine

3-2) Check method for compressor terminal of compressor malfunction.

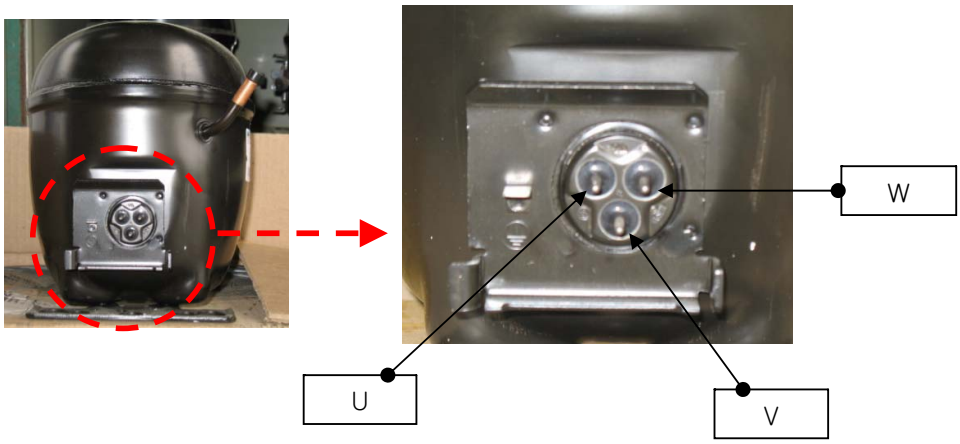

● Check method for COMP or Resistor value

-> V phase Resistor value = W phase + U phase
-> W phase Resistor value = V phase + U phase
-> U phase Resistor value = W phase + V phase

=> Normal phase : W, V, U phase Resistor value is coincided.
=> Abnormal phase : W, V, U phase Resistor value is not coincided.

Average resistor value (Measured at room temp.)		
V phase (Ω)	W phase (Ω)	U phase (Ω)
8.5 ±0.1	8.5 ±0.1	8.5 ±0.1

● Caution

But, when motor has high temp. (Product) at a coil, higher resistor value shows.
(When power is connected, there is no problem)

3-3) Checking method of inverter input signal

`

● Check waveform of inverter input signal.

-> Normal phase signal : Signal waveform is composed at A area.
-> Abnormal phase Signal : Signal waveform is composed at B area getting out from A area. (Refer page 40)
-> High level of pulse at normal phase operation shall be min. 5V and low level shall be under 0.7V.

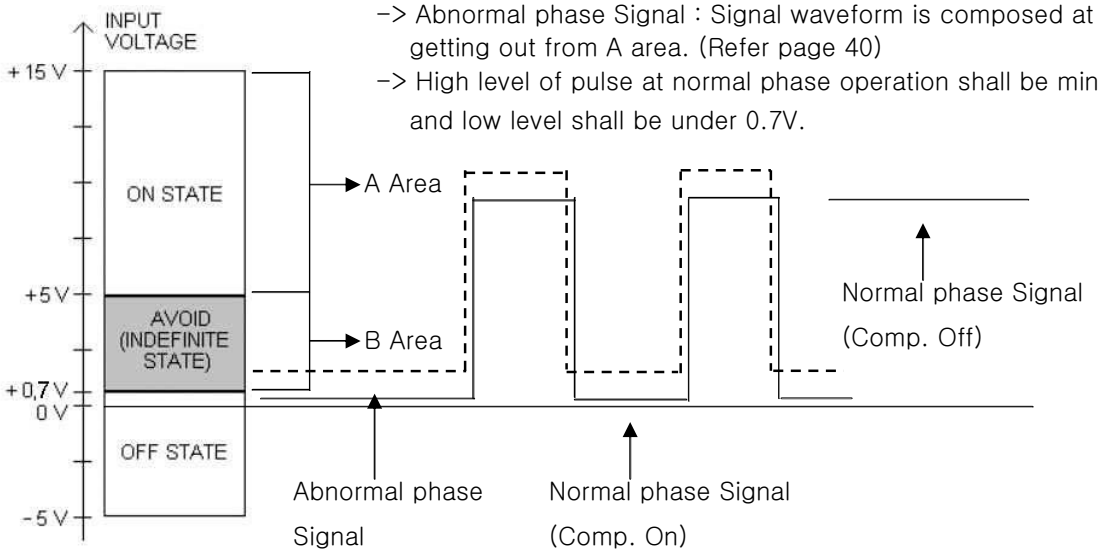

Downloaded from www.Manualslib.com manuals search engine

8-11-3. Introduction of CYCLE(R-600a) repairing tool set

No.	Equip. Name	Image	No.	Equip. Name	Image
1	Tap Plier		6	Can Adapter	
2	Pinch Plier		7	Vacuum Pump	
3	Electronic Scale		8	Refrigerant Discharge Hose	
4	Gas Leakage Inspector		9	Charging Nipple (For gas injection)	
5	R-600a Refrigerant Can		10	Welding M/C	

8-11-4. Parts for repairing CYCLE(R-600a)

1. COMPRESSOR	2. DRYER	3. WELDING ELECTRODE
		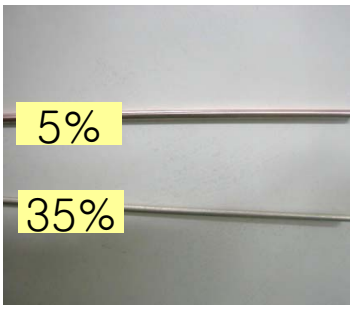

Downloaded from www.Manualslib.com manuals search engine

8-11-5. Repairing work procedure for CYCLE(R-600a) (Change compressor)

1Step.
Remove R-600a refrigerant

- Connect refrigerant discharge hose and install it at outside of a window.
- Discharge time: 7 minutes.

2Step.
Remove residual refrigerant

- Remove residual refrigerant by connecting vacuum pump at end of discharge hose .
- Discharge time: 10 minutes.

3Step.
Change comp. dryer, weld pipe

- Change Comp, Dryer
- Weld Pipes
- Cu-Cu : 5% weld
- Cu-St : 35% weld

4Step.
Weld charging nipple

- Weld charging nipple
- ※Certainly separate nipple cap and gas charge cap and perform welding. (Refer detail content)

5Step.
Vacuum

- Connect manifold gauge and check vacuum.
- Vacuum time : 60~80 minutes.

6Step.
Charge R-600a refrigerant

- Charge refrigerant with refrigerator operating condition
- Charging time : 10 minutes.

Downloaded from www.Manualslib.com manuals search engine

* Detail description of CYCLE(R-600a) repair

NO.	WORK NAME	WORK FIGURE	WORK DESCRIPTION
1	**Pinch plier and connect discharge hose**	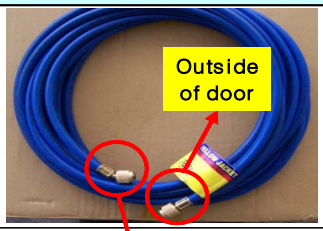	1. Connect refrigerant discharge hose to pinch plier. 2. Install the other end of discharge hose to the outside of door.
2	**Pinch piler and fix charging pipe**	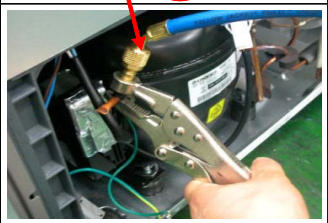	1. Fix pinch plier to compressor charging pipe 2. Fix tool so that there is no moving. ※ When there is moving, it may cause fire by inlet of refrigerant in to a room.
3	**Discharge R-600a refrigerant**		1. Discharge R-600a refrigerant to outside of a room. [Before connect to vacuum pump] ※ Perform more than 7 minutes for discharge of refrigerant
4	**Discharge residual refrigerant**	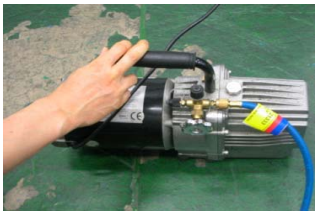	1. When it pass more than 7 minutes, connect vacuum pump at end of discharg ※Certainly operate vacuum pump at well ventilated outside area 2. Operate vacuum pump more than 10 minutes to discharge residual refrigerant at pipe
5	Remove pinch plier and separate pipe		1. Separate welding area of del. pipe, suction pipe, capillary tube,dryer&hot pipe ※ Be careful there is no damage to parts by welding flame.
6	Change compresser and dryer		1. Change compressor, dryer ※ Necessarily check compressor spec. per model and use same compressor

Downloaded from www.Manualslib.com manuals search engine

* CYCLE(R-600a) phase Step

NO.	WORK NAME	WORK FIGURE	WORK DESCRIPTION
7	Welding	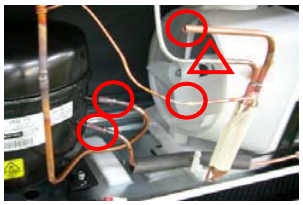	1. Weld connection area of del. Pipe, suction pipe,capillarytube,dryer&hot pipe ※ O Cu. & Cu. Weld - 5% Weld △ Cu. & St. Weld - 35% Weld
8	Disassemble charging nipple		1. Separate charging nipple cap and separate inside valve ass'y ※ Inner rubber melt if perform welding without separating inside valve.
9	**Weld charging nipple**		1. Insert charging nipple to compressor and perform welding ※When perform welding, wrap parts inside of machine room with wet clothes.
10	Assemble charging nipple & connect manifold gauge		1. Insert charging nipple valve ass'y and assemble it by rotating clockwise. 2. Fix blue hose of mainfold gauge at charg-ing nipple and connect yellow hose to pump. 3. Open lever of blue gauge and operate vacuum pump.

Downloaded from www.Manualslib.com manuals search engine

* CYCLE(R-600a) phase Step

NO.	WORK NAME	WORK FIGURE	WORK DESCRIPTION
11	Vacuum	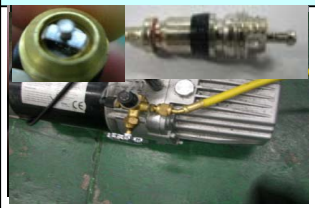	1.Make inside of cycle vacuum by operating vacuum pump. ※Surely perform vacuum for 60~80 minutes >When perform vacuum within 60 minutes perfromance to be weak and cause of light
12	Check vacuum	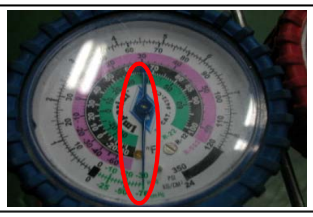	1. Check whether gauge scale reach to -76㎝Hg. ※ If it is not possible to make vacuum it has a leakage problem.
13	**Adjust R-600a can refrigerant quantity**		1.Measure weight of R-600a can refregerant at electronic scale and discharge all ※ Perform discharge of residual refrigerant at well ventilated out side. ※ Adjusting method of refrigerant quantity - Can weight: -160g(Bottle75g+Refrigerant 85g - Adapter weight : 145g => Total weight : 305g - Refrigerant charging quantity: 79g (6g discharge) => Total can weight shall meet 299g
14	Connect charging nipple & connect adapter		1. Connect can adapter to charging nipple 2. Open adapter lever slowly and charge refrigerant ※ Careful for connection so that there is no leakage

Downloaded from www.Manualslib.com manuals search engine

* CYCLE(R-600a) phase세 수리 Step

NO.	WORK NAME	WORK FIGURE	WORK DESCRIPTION
15	Charge refrigerant	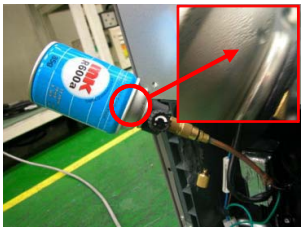	1. Connect electrical source to refrigerant and charge refrigerant approx. 10 minutes ※ Charge refrigerant so that there is no dew around can charging area
16	Check leakage of welding area		1. Check leakage around welding area using gas leakage inspector ※ When there is gas leakage, work again start from No.1
17	Finish work	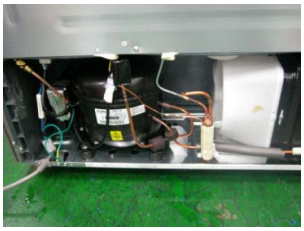	1. When repair work finished, remove foreing matter arounc machine room and finish work. 2. Assemble machine room cover

Downloaded from www.Manualslib.com manuals search engine

8-11-6. Caution when repairing CYCLE(R-600a)

Item	Caution
refrigerant R-600a characteristic	1) R-600a refrigerant is natural gas of refrigerant(C4H10) with no harmful. 2) R-600a refrigerant is a kind of butane gas and when discharged to atmosphere with adequate concentration, there is danger such as fire or explosion. 3) It need very careful caution during repairing CYCLE.
CYCLE repairing area & environment	1) Check working area whether it has good ventilation and air flow 2) Necessarily use refrigerant collection bag when work at room. 3) Check and remove fire or heat source around work area. 4) Never discharge refrigerant at room because it is flammable. 5) Surely follow instruction procedure of SVC during repair.
Using tools	1) Use special tools and parts for R-600a refrigerant for refrigerator.
Removing residual refrigerant	1) When discharge residual refrigerant, necessarily disconnect electric source of refrigerator and remove refrigerant 5 minutes after disconnecting electric source . 2) When discharge refrigerant, first cur high pressure side and then cut low pressure side. 3) When dryer is clogged, cut capillary tube to discharge refrigerant.
Change dryer	1) When charging refrigerant or repair piping, necessarily change using dryer for R-600a.
Nitrogen blowing welding	1) When welding, perform nitrogen blowing with constant 2) Pressure to protect oxidized scale. 3) (Nitrogen pressure:0.1~0.2 kgf/cm^2)
Others	1) Use nitrogen gas to clean inside of cycle piping. 2) Check leakage using electronic leakage tester. 3) Necessarily use pipe cutter when cutting pipe. 4) Be careful there is no moist penetrate in to cycle. 5) When discharge refrigerant, never use welding machine or fire. 6) Never perform repair by the person without finishing training course for R-600a. 7) Make sure correct ventilation during repair. 8) Check leakage test surely after repair. 9) Never apply welding or flame after charging refrigerant.

Downloaded from www.Manualslib.com manuals search engine

9. Hoe to take action against Unsatisfied Quality of Sensitivity

9-1. Temperature

Consumer Unsatisfied Content	Explanation and Action
Refrigeration is not possible.	Normally a refrigerator is delivered with 'medium' position and inner temperature of a refrigerator can be changed according to the condition and environment of consumers. Some consumers complain even for the change of dial position. In this case, we can not meet taste of all consumers and explain that refrigerator is set to typical temperature and designed so as to change temperature by dialing according to taste of a consumer.
Fish stored at meat storage room becomes melt.	Meat storage room is a storage room for fish and meat to consume it within 1~2 days and sustains temperature range which is not suitable for a long time storage of fish or meat. In this case, explain to store fish or meat at freezer.
Refrigerator is weak in performance compare with previous one and does not feel cool than neighbor's one.	It is because of feeling difference of a consumer according to large size refrigerator if previous one is a small size or mechanical type. Especially when storing period of food stuff is not becomes short, it is because of difference of feeling. Recommend to change dial to 'strong' position.
Water stored at refrigerator does not feel cool.	Normally water is stored at a door pocket and when cooling air flow is blocked, cooling air flow to the door pocket may not smooth. In this case recommend to move food stuff stored at nearby of cooling air discharge port.
Ice cream becomes melt.	The freezing point of high grade ice cream to be down and normally ice cream becomes freeze under -13℃. So, when open/close door of freezer frequently, ice cream may be melt. Recommend to change ice cream storage area at inside of freezer or change dial to 'strong' position.
Kimchi becomes freeze.	Kimchi is easy to be frozen when temperature is low because it contains lots of water. When storing Kimch, store Kimchi at a place away from cooling air discharge port. Especially when large size box such as Kimchi box blocks cooling air discharge port, temperature such as pocket may be raised.
Vegetable becomes freeze.	Vegetable is easy to be frozen even for a small quantity of cooling air flow because it contains lots of water. So, it is easy to be frozen when vegetable is not stored at vegetable storage room.
Refrigeration is strong.	When water or food stuff stored at refrigerator becomes freeze recommend to change dial to 'light' position and when only food stuff stored in front of cooling air discharge port becomes freeze, recommend to move it to the other places away from cooling air discharge port .

Downloaded from www.Manualslib.com manuals search engine

9-2. Noise

Consumer Unsatisfied Content	Explanation and Action
'Whiz' noise	There is noise generating source at refrigerator such as compressor, cooling fan and fan at machine room. - Cooling fan In case for a freezer, there is a freezer fan and the function of this fan is to circulate cooling air inside of freezer. When cooling air flows through a narrow path, there may be wind blow noise or vibration noise. Also, when open/close door of a freezer or put in food stuff inside of a freezer, a fan operates at high speed to drop down inside temperature and noise level may be goes up. - Machine room fan There is a fan at machine room to cool down machine room which is located at back side of a refrigerator. When move a refrigerator in close to a wall surface, restriction of air flow generates and 'whiz' noise becomes high. - Compressor The largest noise source at a refrigerator is a compressor and it operates with high revolution at3,600RPM to circulate refrigerant.
'tuk-tuk' noise from refrigerator.	It is a noise because of shrinkage, expansion of parts according to change of inner temperature of internal evaporator and pipes when a refrigerator operates.
Water flow noise from refrigerator.	It is a noise because high pressurized refrigerant at condenser flow into evaporator when a refrigerator stops operation.
Rumbling noise from refrigerator.	It is a noise because vaporized refrigerant which comes from oil collection hole pass through liquid refrigerant which is accumulated at evaporator accumulator when a refrigerator stops operation.
Rattle, thud noise from refrigerator.	There is a compressor at a refrigerator and when this compressor starts/stops operation, there is thud noise because of vibration of motor and piston.
'zing' noise from refrigerator.	Normally 'zing' noise comes when pipes contact each other. Separate pipes or insert anti-vibration rubber to gat rid of vibration. When noise comes because of evaporator plate is not fixed or part of evaporator plate contacts with compressor base, protect vibration by applying sealing material etc.
	When level is not done adequately during installation of a refrigerator, noise may be expanded even though for a small noise , adjust level adjusting thread so that refrigerator shall not move. There may noise become grow by vibration when install a refrigerator at wooden floor or wooden wall surface.

Downloaded from www.Manualslib.com manuals search engine

9-3. Odor, freezer

Consumer Unsatisfied Content	Explanation and Action
Lots of odor from a refrigerator	There are several smell for food stuff. Especially for fermented food stuffs which are famous for Korean, it have unique smell and can not remove smell even though by deodorant. When odor becomes strong, set inner temperature of a refrigerator to 'strong' position and wipe inner surface of a refrigerator thoroughly using detergent such as 'Pong-Pong'. Especially when cap of bottle of pickled food stuff or Kimchi is opened or spilt over rack etc, odor may be generated terribly. Explain to consumer that it need to be cleaned periodically for a refrigerator.
Frost exist at a freezer	In case there are lots of frost generating suddenly, -Door is opened -Gap of a gasket becomes large and external air flow in to freezer -Door of a freezer is opened/closed frequently or -Put hot water in to freezer without cooling down it. And, when open door especially at summer season with lots of humid and high temperature, high temperature and lots of humid air flow into freezer every time when open door of a freezer and stick to food stuffs. But this is a temporary phenomenon and can be solved when reduce using of a freezer.
Frost happen in front of a ice maker.	When pour water at ice maker and put it into a freezer, there arise water vaporization phenomenon at a surface of water and when cooling air flow into here from back side of a cooling air discharge port, frost is generated momentarily.

9-4. Others

Consumer Unsatisfied Content	Explanation and Action
Side of a refrigerator is hot	There is anti-heat radiation pipes to protect dewdrops in front and surrounding of a refrigerator and freezer. Especially for the summer season where room temperature rise up or when refrigerator is installed close to wall surface, side of a refrigerator becomes hot because of bad heat radiation. Make good ventilation around a refrigerator.
There is a small hole at inside of a door of a refrigerator	The reason for a small hole inside of a door of a refrigerator is a air hole to disperse insulation material well inside of a door during insulation process for a door. It is normal case and use a refrigerator without concern.
Door of a refrigerator does not opened easily	When open door of a refrigerator, cooling air from inside of a refrigerator and hot air from outer side meet and in this case volume of inner air of a refrigerator becomes small and create negative pressure momentarily. This is a same principle when hot water PET bottle is stored at a refrigerator, PET bottle becomes crushed and this phenomenon is normal case for a refrigerator.
Door of a refrigerator is jiggled.	Doors of a freezer and refrigerator of a refrigerator is opened each other and when close a door of a refrigerator, air flow in to a refrigerator move to the other chamber through connecting passage and air volume over the volume of a refrigerator flow out from a refrigerator.

Downloaded from www.Manualslib.com manuals search engine

10. Disassemble/assemble method for each parts

※Assemble method is a vice versa of disassembling sequence

10-1. Inner lamp changing method

Freezer LED changing

Separate back side of a LED cover using (-) driver.

Separate LED cover and loosen 2 fixing screws for LED plate.

Disconnect harness of LED plate and change LED.

Refrigerator LED changing

Same as disassemble of a freezer.

Same as disassemble of a freezer.

Same as disassemble of a freezer.

Dispenser Type Freezer LED changing

◆ Separate Geared-Motor Box. (Refer 'Geared-Motor separation' part)

Separate back side of a LED cover located at bottom of Geared-Motor Box using (-) driver.

Separate cover and loosen 2 fixing screws for LED plate.

Disconnect harness from LED plate and change LED.

Downloaded from www.Manualslib.com manuals search engine

10-2. Ice maker/ Geared-Motor changing method

Ice maker changing

Pull bottom of a ice box and separate ice box from a freezer.

Grip bottom of a ice maker cover and pull it to separate from a freezer.

Loosen 2 fixing screws at roof of a freezer and pull a ice maker toward forward direction to separate it.

Disconnect harness connected to a ice maker and separate ice maker from a freezer.

Geared-Motor changing

◆ Separate ice maker.

Disconnect 2 kinds of harness which is connected with a Geared-Motor box at upper part of a freezer.

Loosen 4 fixing screws for a Geared-Motor box.

Downloaded from www.Manualslib.com manuals search engine

10-3. Freezer cooler area changing method

◆ Pull out food stuffs and rack inside of a freezer

Separate cooler fan cover - Dispenser Model

◆ Separate ice maker & Geared-Motor box.

Separate heater housing for water supply pipes.

Separate cover & water supply port (silicon rubber) by loosening screw at cover of a water supply pipe at back side of a refrigerator.

Push back a water supply pipe located at back side of a freezer and go to back side of a refrigerator and pull out a water supply pipe.

Remove screw cap of a fan cover located at upper rear side of a freezer.

Loosen fixing screw for a fan cover of a cooler.

Grip cooling air discharge port at fan cover of a cooler by hand and separate it from lock.

Lift up right side of a cooler fan cover to forward direction and tilt it to disconnect and pull out fan harness located at left side of a cooler fan cover.

Separate fan cover of a cooler.

Downloaded from www.Manualslib.com manuals search engine

Cooler fan cover separation – Basic Model

Remove screw cap of a cooler fan located at rear upper side of a freezer.

Separate fixing screw of a cooler fan cover.

Grip cooling air discharge port of a cooler fan cover and pull it forward direction to separate it from lock.

Lift up right side of a cooler fan cover to forward direction and tilt it to disconnect and pull out fan harness located at left side of a cooler fan cover.

Separate cooler fan cover.

Downloaded from www.Manualslib.com manuals search engine

Cooler fan / Fan motor separation

◆ Separate cooler fan cover.

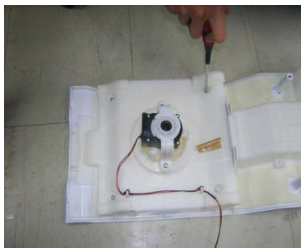

Loosen 4 fixing screws for a fixture f motor located at rear side of a cooler fan cover.

Separate 4 hooks to separate a fixture f motor.

Pull out fan assembled at inner side of a fixture fan motor to vertical direction. [Fan separation]

Fan fixing rings are fixed with lock tight. (Kinds of bond)

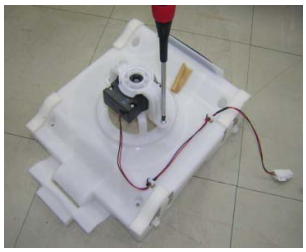

Loosen 2 fixing screws for fixture f motor B from back side of a fixture fan motor.

Motor can be separated by separation of a fixture f motor B.

Caution when disassemble/assemble fan & fan motor.

- Assemble motor so that there is no tilt or loosening. (To prohibit noise generating problem)
- When fixing a fan, fix it using fan fixing rings to protect moving or separation and apply lock tight. (Kinds of bond)
- After fixing a fan, rotates fan by hand to check interference with surrounding parts. When there is interference with surrounding parts, fix fan or motor again.

Disassemble drawing for fan & fan motor

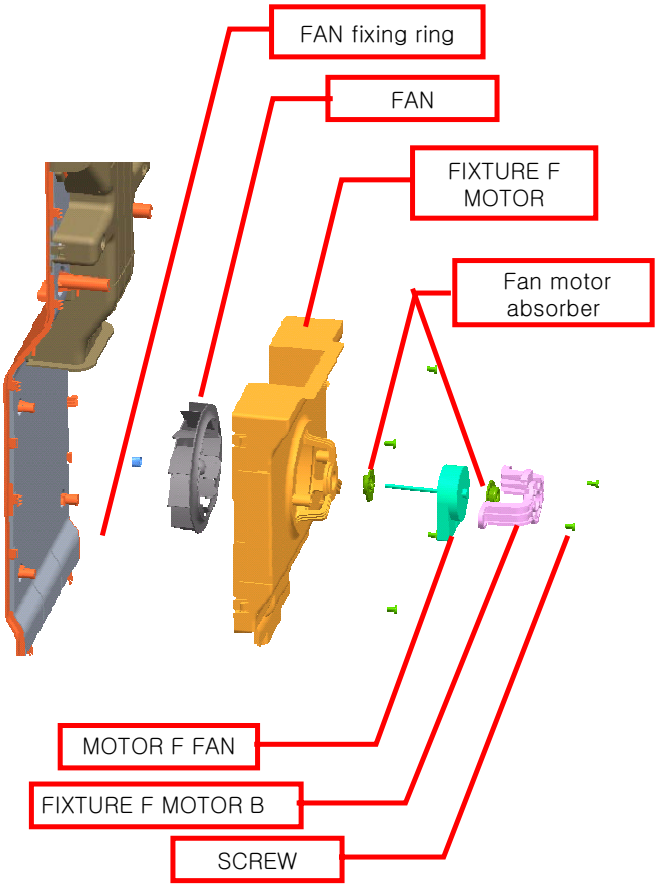

Downloaded from www.Manualslib.com manuals search engine

Cooler front cover separation – Common

Remove a screw cap at center of a return cover located at bottom of a cooler front cover.

Loosen a screw at center of a return cover.

Separate hooks using (–) driver by twisting it which is assembled at return cover and front cover.

Pull upper part of a return cover and press it to downwards.

Separate a return cover through bottom of a freezer.

Grip upper part of a duct cover which is assembled at center of a cooler front cover and pull it out to forward direction to separate.

Loosen a fixing screw at cooler front cover.

Grip upper part of a cooler front cover by hand and pull it forward direction to separate it.

Figure of a freezer room after cooler front cover is removed.

Downloaded from www.Manualslib.com manuals search engine

Detail of a cooler(EVA)

cooler(EVA)

cooler housing connection

D-sensor housing

Defrost heater +temp. fuse housing

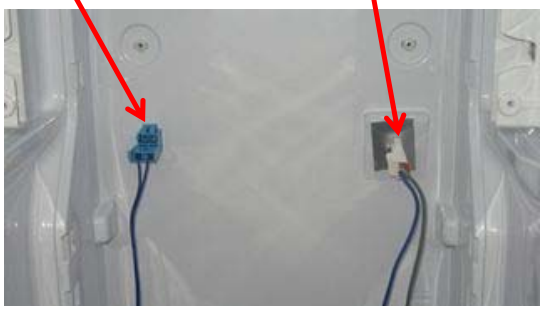

D-sensor

Temp. fuse

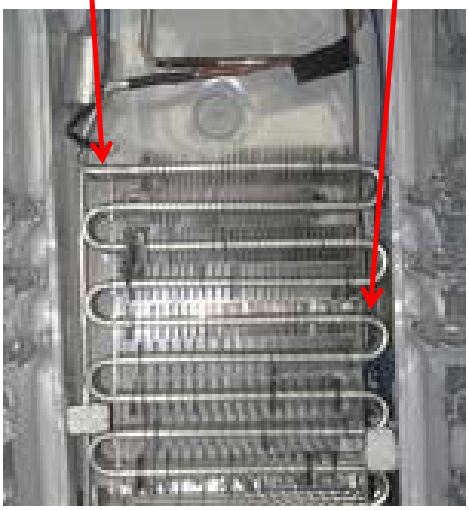

EVA upper area

Defrost heater

EVA bottom area

Downloaded from www.Manualslib.com manuals search engine

10-4. Refrigerator Damper changing method

◆ Pull out food stuffs and rack from refrigerator .

Damper cover disassemble (Exterior filter type)

Open window of a damper cover and bend it lightly at center part to separate window.

Loosen 2 screws at inside of a damper cover.

Grip lower side of a damper cover and pull it forward to separate it.

Damper cover disassemble (Interior filter type)

Remove interior filter at right side of a damper cover.

Open window of a damper cover and bend it lightly at center part to separate window.

Loosen 2 screws inside of a damper cover.

Grip lower side of a damper cover and pull it forward to separate it.

Downloaded from www.Manualslib.com manuals search engine

Refrigerator Damper changing

◆ Disassemble damper cover.

Damper is assembled at left side wall of a refrigerator where damper cover is disassembled.

Disconnect harness connected with a damper and pull out a damper.

10-5. Refrigerator switching room changing method

Switching room disassemble

Loosen right, left side screws of a switching room.

Lift up a changing room lightly and pull it forward a little bit and separates a housing and then separate a changing room.

Switching room damper disassemble

◆ Disassemble switching room

Loosen a screw of a damper cover assembled at left side of a refrigerator.

Remove a damper cover.

Disconnect harness connected with a damper and pull out a damper.

Downloaded from www.Manualslib.com manuals search engine

Changing room PCB Disassemble

◆ Disassemble changing room.

Lift up a hook at back side of a changing room a little bit using (1) driver and pull out a changing room cover to separate it from a changing room.

Loosen screws at bottom of a changing room cover.

Separate PCB box from changing room cover and disconnect harness between main PCB and front PCB.

Separate PCB by loosening fixing screw of a Main PCB & Front PCB.

Downloaded from www.Manualslib.com manuals search engine

10-6. C-Fan Motor changing method

Separate C-fan motor housing at upper right part of a machine room.

Loosen screws at upper, lower part of a bell mouth.

Make a space to pull out bell mouth by pushing dryer lightly which is located in front of a bell mouth to a compressor side.

Push and pull forward lock of a bell mouth and separate bell mouth ass'y. (Be careful blade of a fan not to be deformed during disassemble)

Separate a blade of a fan from a C-Fan motor shaft.

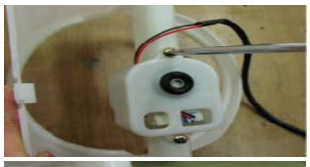

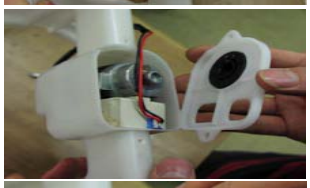

Loosen screws of a motor cover and separate cover and pull out C-fan motor.

Downloaded from www.Manualslib.com manuals search engine

10-7. Front PCB changing method

◆ Necessarily disconnect power cord before working.

Basic Type

Separate film by inserting (-) driver at right side of a PCB groove at a freezer door.

Separate a FBC from a refrigerator at a hole on the film removed area.

Disconnect 2 harnesses connected with FCB and separate FCB completely.

Dispenser Type

Loosen screws at bottom side of a FCB of a freezer dispenser.

Grip bottom side of a FCB with two hands and lift and pull it forward side to separate FCB.

Disconnect 2 harnesses connected with FCB.

10-8. Dispenser area LED changing method

◆ LED lights at dispenser area are built-in at front PCB.

◆ To change LED light at dispenser area, front PCB shall be changed.

Downloaded from www.Manualslib.com manuals search engine

10-9. Dispenser area flap lever/dispenser lever/SOL-valve changing method

◆ Necessarily disconnect power cord before work.

Dispenser guide separation

◆ Disassemble front PCB.

Pull out harness connected to Solenoid Valve. Be careful harness does not be damaged.

Separate a housing of a dispenser flap heater.

Loosen 4 screws for fixing a dispenser guide.

Grip front side of a dispenser guide and separate by pulling it forward.

Open up fixing hook and pull out micro switch which is assembled at rear side of a dispenser guide.

Open up fixing hook and pull out micro switch which is assembled at rear side of a dispenser guide.

Downloaded from www.Manualslib.com manuals search engine

Dispenser flap lever changing

◆ Disassemble dispenser guide.

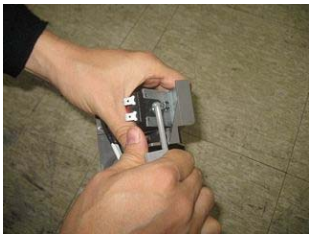

Grip solenoid valve of a flap lever which is assembled at dispenser guide by hand and pull it upper side.

Separate a flap lever completely by pulling it along shaft direction where flap lever spring is assembled.

▶ ▶ ▶ Flap heater changing ▶ ▶ ▶

Separate a silicon rubber at flap lever.

Flap heater can be separated when pull out cushion seal material inside of a flap laver.

Dispenser lever changing

◆ Disassemble dispenser guide.

Separate a dispenser lever shaft by lifting one side of a dispenser lever up side along sloped shape home.

Separate a dispenser lever by pulling it along shaft direction where dispenser lever spring is assembled.

Solenoid valve changing

◆ Disassemble dispenser guide.

Loosen solenoid valve fixing screws.

Separate solenoid valve by pulling it down wards and pull out solenoid pin by rotating flap lever.

Downloaded from www.Manualslib.com manuals search engine

10-10. Home bar door area changing method

Home bar door disassemble

Open home bar door and separate cover at bottom side using (-) driver.

Insert (-) driver at shaft head and grip and pull home bar door with the other hand.

Door can be separated when move shaft to a certain distance.

Separate home bar door from a refrigerator by twisting it from left side in sequence.

Home bar door damper disassemble

◆ Disassemble home bar door.

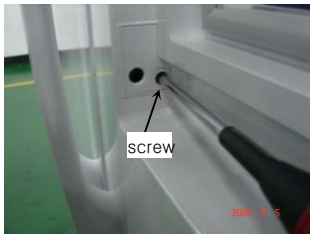

Loosen cover damper fixing screw.

After loosen screw, pull and separate damper cover to arrow direction using a tool.

Separate damper fixing screw.

Separate damper support using blade as left side figure.

Separate damper.

※ Separate right side damper as above..

Downloaded from www.Manualslib.com manuals search engine

Home bar frame latch disassemble

Open home bar door and loosen latch cover fixing screw at upper part of a home bar.

Separate latch cover.

Remove latch fixing screw.

Separate latch from home bar frame.

Home bar door switch disassemble

◆ Disassemble latch cover.
- Refer home bar frame latch disassemble method

Pull out home bar door switch from fixing home.

Grip lead switch end connector by hand.

Disconnect harness.

Downloaded from www.Manualslib.com manuals search engine

10-11. Door switch area changing method

Door switch disassemble

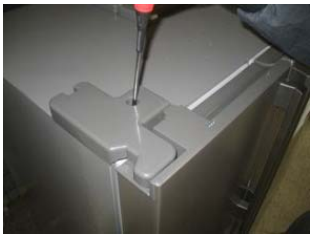

Loosen 2 hinge cover fixing screws.

Open door and lift up rear side of a hinge cover and disassemble it.

Separate door switch by pressing round shape projected area of a door switch.

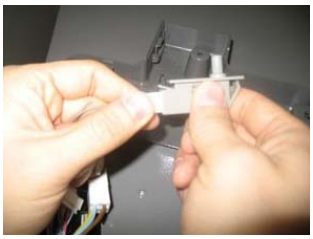

Disconnect harness connected to a door switch.

※ Door switch disassemble method of a refrigerator & freezer is same.

Downloaded from www.Manualslib.com manuals search engine

11. refrigerator product installation method

11-1. Prepare for installation

Check followings whether refrigerator may be entered through a door

MODEL	Product dimensions (Include handle)
X-22B 22D/E/F/G	906mm X 735mm X 1770mm (W X D X H)

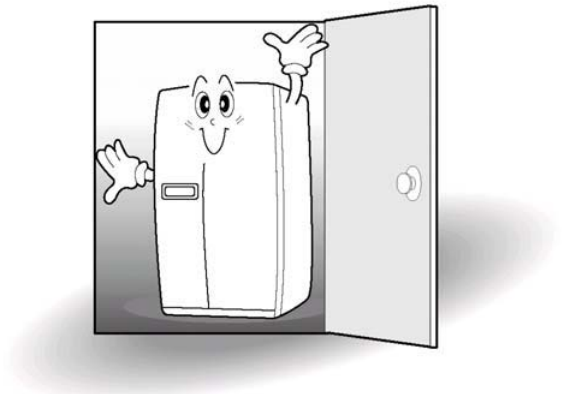

Select adequate area for installation

※ Keep an adequate distance from a wall so that good ventilation can be done.

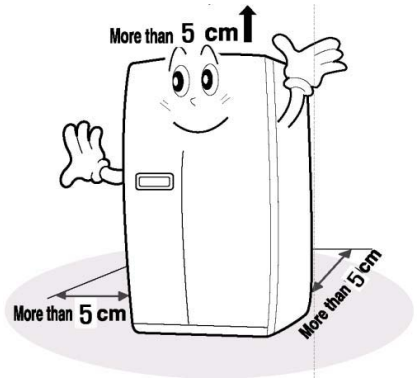

※ Prohibit from direct sun ray

If installation area is prepared, install according to procedure of the following chapter.
If ambient temperature of a refrigerator is too low(Under 5℃), food stuffs may be frozen or a refrigerator may not be operated with normal condition.

Downloaded from www.Manualslib.com manuals search engine

11-2. When refrigerator can not enter through a door

Freezer door disassemble (General Type Model)

◆ First, separate front cover.

1 Using driver, loosen 2 hinge cover fixing screws at upper part and separate cover by leaning it to side of a hinge cover.

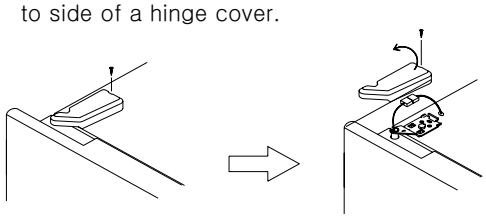

2 Loosen upper part of a hinge fixing bolt by rotating it to anti-clock wise and pull out housing for wire connection.

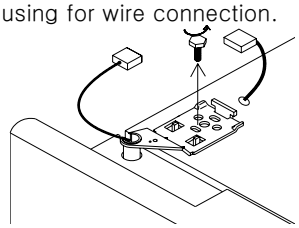

3 Separate upper hinge by lifting it.
(Be careful door may be fall down forward.)

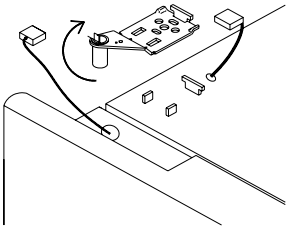

4 Lift up a freezer door lightly and separate it from a bottom hinge.

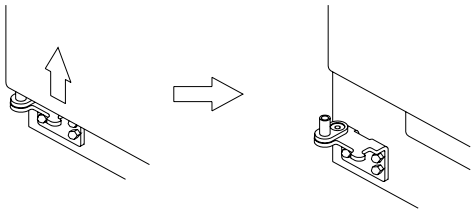

Freezer door disassemble (Dispenser type model)

◆ First, separate front cover.

1 Separate front plate cover and open door and loosen water supply hose fixing screws which are connected with door.

2 Pull out connection fitting between hoses.
Pull out end of a fitting to fitting direction and pull out connected hoses.

3 Separate bending fixture for water supply hose bending which is assembled water supply hose at door side.

4 Disassemble method for Basic type model Door: Proceed disassemble same for step 1~4. (Separate door by lifting it until water supply hose of a freezer door is separated.)

Downloaded from www.Manualslib.com manuals search engine

Refrigerator door disassemble

1 Using driver, loosen 2 hinge cover fixing screws at upper part and separate cover by leaning it to side of a hinge cover.

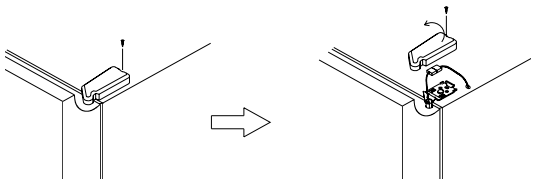

2 Loosen upper part of a hinge fixing bolt by rotating it to anti-clock wise and pull out housing for wire connection.

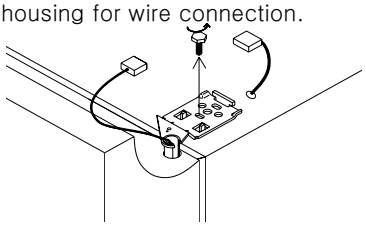

3 Separate upper hinge by lifting it.
(Be careful door may be fall down forward.)

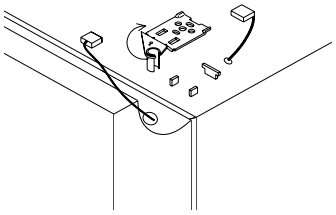

4 Lift up a freezer door lightly and separate it from a bottom hinge.

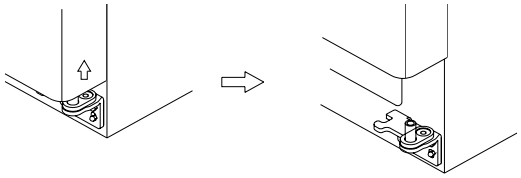

Freezer door assemble (Basic type model)

1 Assemble a freezer door to bottom hinge.

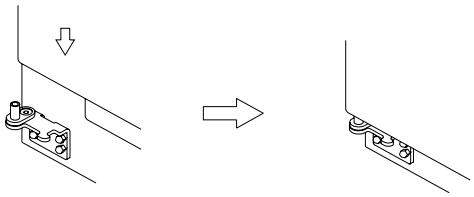

2 Make a freezer door close to arrow direction and assemble door by inserting upper hinge to a hole of a door hinge.

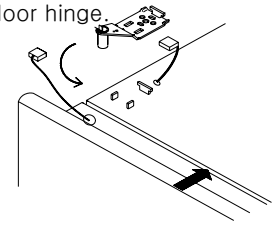

3 Rotate upper hinge fixing screw to clock wise To fix door and connect housing for wire Connection.

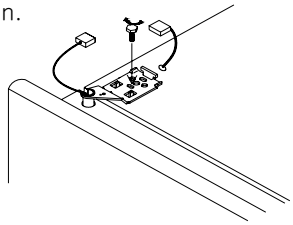

4 Assemble upper hinge cover so that snap sounds and fix it using fixing screw.

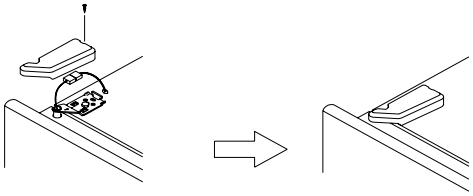

Downloaded from www.Manualslib.com manuals search engine

Freezer door assemble (Dispenser type model)

1 Insert a freezer door water supply hose at a bottom hinge and assemble a door at bottom hinge.

2 Door assemble method for basic type model is same as for step 2~4.

3 Assemble bending fixture for water supply hose bending and connect water supply hose using fitting for connection.
Connection can be done by inserting hose into a fitting. In this case insert hose by pushing it strongly to make maximum connection.

4 Fix connecting area between water supply hoses (fitting connection area) using screws.

Refrigerator door assemble

1 Assemble a refrigerator door to bottom hinge.

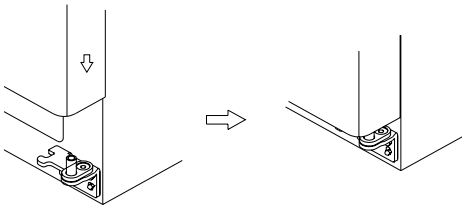

2 Make a refrigerator door close to arrow direction and assemble door by inserting upper hinge to a hole of a door hinge.

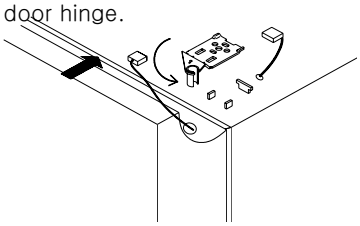

3 Rotate upper hinge fixing screw to clock wise To fix door and connect housing for wire Connection.

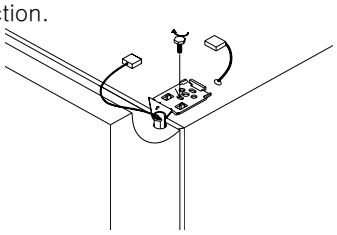

4 Assemble upper hinge cover so that snap sounds and fix it using fixing screw.

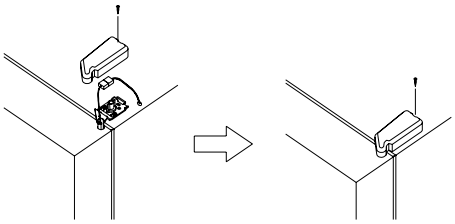

Downloaded from www.Manualslib.com manuals search engine

Front Plate Cover assemble

※ Fix Front Plate Cover using 3 screws as shown in direction of the following figure.

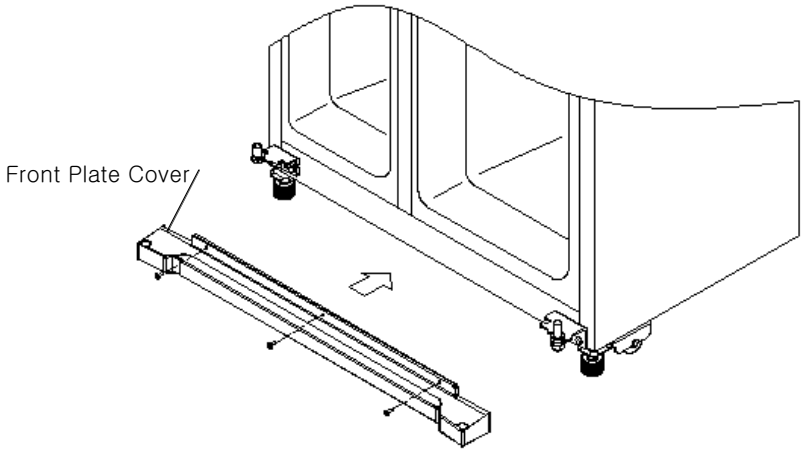

11-3. Height and level adjustment of a refrigerator

※ For the good out looking and performance of a refrigerator, height of a refrigerator shall be well adjusted.
(When bottom floor has a irregular shape, a refrigerator & freezer door looks unbalanced.)

When freezer door is low than a refrigerator door

Insert (-) driver to an adjustable leg at a freezer side and rotates to clockwise to level.
(When rotates clock wise, freezer door becomes raised and rotates reverse side, door becomes fall down.)

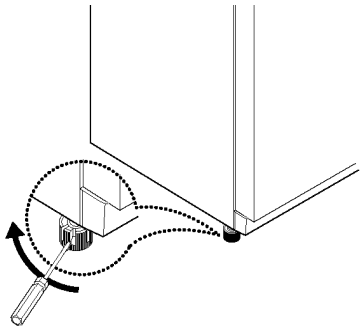

When refrigerator door is low than a freezer door

Insert (-) driver to an adjustable leg at a refrigerator side and rotates to clockwise to level.
(When rotates clock wise, refrigerator door becomes raised and rotates reverse side, door becomes fall down.)

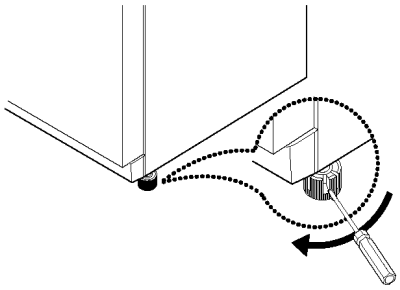

Caution

To make door can be closed easily, front side of a refrigerator need to be slightly higher than a rear side. But, when raise adjusting leg too high to level, and if front side of a refrigerator become too high compare with a rear side, it will be hard to open door.

Downloaded from www.Manualslib.com manuals search engine

Bottom hinge height adjust : When there is lots of mismatch between freezer/refrigerator door

※ When it is not easy to adjust freezer/refrigerator mismatch by adjusting leg, adjust bottom hinge as followings.

● When refrigerator door is low compare with a freezer door.

1. Insert (-) driver to an adjustable leg at a refrigerator side and rotates to level.

* When level is not possible even though rotating adjustable leg, level according to following procedure.

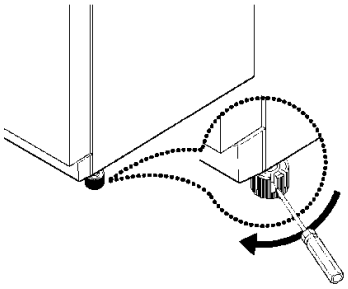

NEXT

2. Open refrigerator door and separate front plate cover with a refrigerator. (When moving refrigerator after installation)

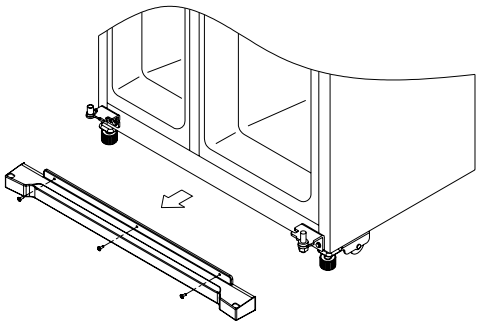

NEXT

3. Insert 'A' part of a wrench in to a refrigerator door hinge nut(1) and loosen nut by rotating clock wise.

4. When inserting 'B' part of a wrench in to a refrigerator door bottom hinge shaft(2) and rotate it anti-clock wise, a refrigerator door can be raised.

5. Insert 'A' part of a wrench to a hinge nut(1) and rotate it to anti-clock wise to fix nut firmly.

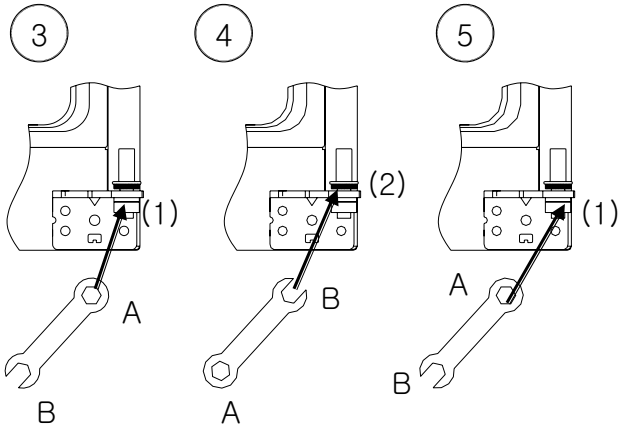

Downloaded from www.Manualslib.com manuals search engine

● When freezer door is low compare with a refrigerator door.

1. Insert (-) driver to an adjustable leg at a freezer side and rotates to level.

* When level is not possible even though rotating adjustable leg, level according to following procedure.

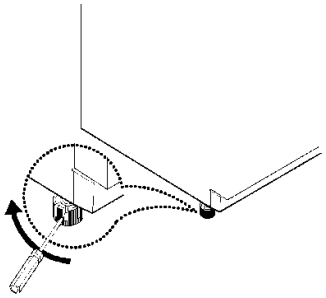

NEXT

2. Open refrigerator door and separate front plate cover with a refrigerator. (When moving refrigerator after installation)

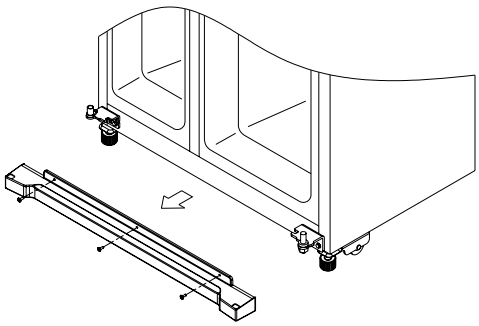

NEXT

3. Insert 'A' part of a wrench in to a refrigerator door hinge nut(1) and loosen nut by rotating clock wise.

4. When inserting 'B' part of a wrench in to a refrigerator door bottom hinge shaft(2) and rotate it anti-clock wise, a refrigerator door can be raised.

5. . Insert 'A' part of a wrench to a hinge nut(1) and rotate it to anti-clock wise to fix nut firmly.

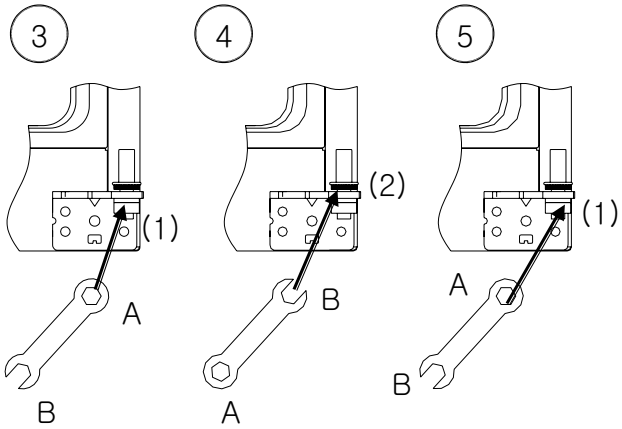

Downloaded from www.Manualslib.com manuals search engine

11-4. How to install Water Line (Dispenser Models only)

1. The water pressure should be 2.0~12.5 kgf/cm2 or more to run the automatic icemaker.
   Checkup your tap water pressure ; if a cup of 180cc is full within 10 seconds, the pressure is OK.
2. When installing the water tubes, ensure they are not close to any hot surfaces.
3. The water filter only filters water ; it does not eliminate any bacteria or microbes.
4. If the water pressure is not so high to run the icemaker, call the local plumber to get an additional water pressure pump.
5. The filter life depends on the amount of use. We recommend you replace the filter at least once every 6months.
   ※When attaching the filter, place it for easy access (removing & replacing)
6. After installation of refrigerator and water line system, select [WATER] on your control panel and press it for 2~3 minutes to supply water into the water tank and dispense water.
7. Use sealing tape to every connection of pipes/tubes to ensure there is no water leak.
8. The water tube should be connected to the cold water line.

External filter type

WATER SUPPLY KIT

※Check the parts below for installing water supply. Some other necessary parts are available at your local service agents.

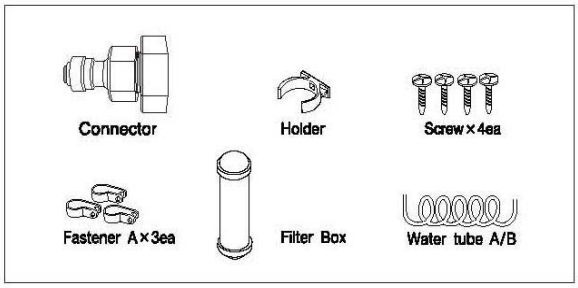

Installation Procedure
(Dispenser Models Only)

1. Join Connector to the tap water line

Figure A

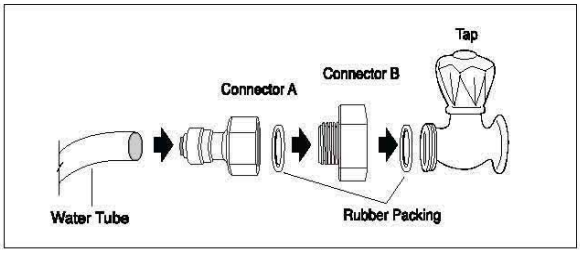

Figure B

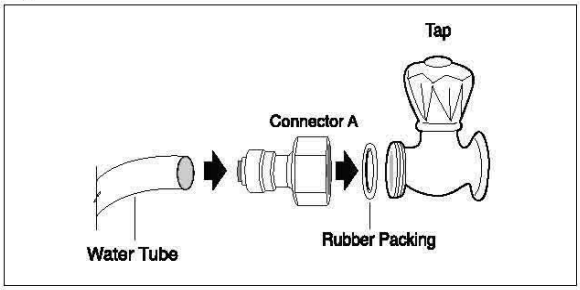

N.B. Place the rubber washer inside the tap connector and screw onto the water tap.

2. Get ready to install the Water Filter

1) Measure an approximate distance between the filter and the Water Tube and cut the tube off filter vertically.
2) Connect the tubes to the filter as the figure shows.

N.B. Leave a sufficient distance when cutting the tubes.

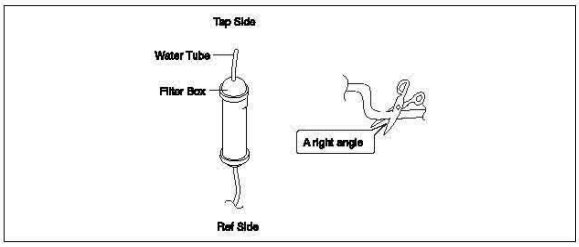

Downloaded from www.Manualslib.com manuals search engine

3. Remove any substances in the filter.

1) Open the main tap water valve and check if water comes out of the Water Tube.
2) Check if the Water Valve is open in case water does not come out.
3) Leave the valve open until clean water is coming out.
   ※Initial water may contain some substances out of filter (manufacturing process).

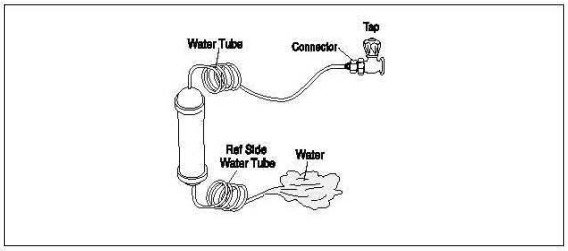

4. Attach the Filter Box

1) Screw and fasten the filter holder to the left/right side of the back of refrigerator.
   ※In case the holder is not fastened well, remove the back paper of the tape on the filter holder and attach it."
2) Insert the filter box into the holder.

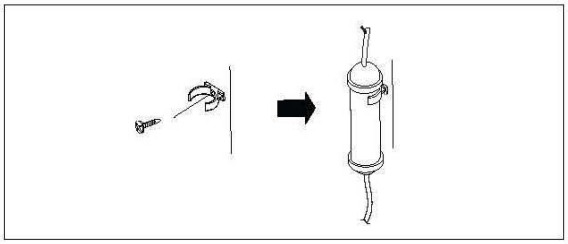

5. Connect the Water Tube to the refrigerator.

1) Remove the rear cover at the bottom back of the refrigerator.
2) Insert the fastening ring into the Water tube. (Be careful to follow the direction of the nut.)
3) Insert the Water Tube into the top of the Water Valve, turn the nut clockwise to fasten it. (The Water valve is to the right of the motors.)
4) Check for any bent tubes or water leaks; if so, re-ckeck instalation procedure.
5) Replace the rear cover. (The Water Tube should be placed between the groove of the refrigerator back and motor cover.)

NB Set the tube upright as the figure shows.

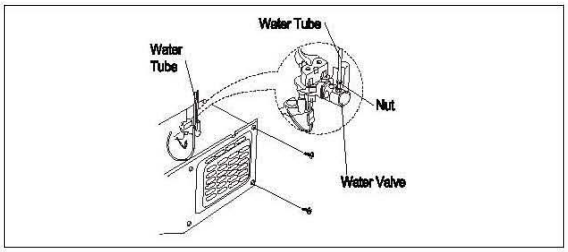

6. Fasten the Water Tube.

1) Fasten the Water Tube with the [Fastener A] .
2) Check if the tube is bent or sqeezed. If so, set it right to prevent any water leak.

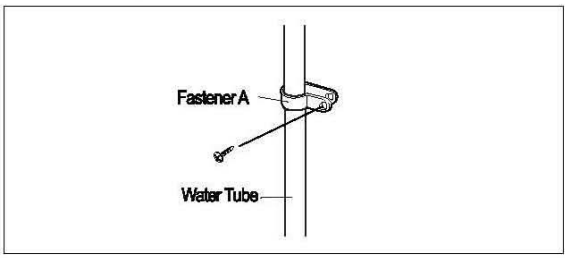

7. After installation of Water Supply System

1) Plug in the refrigerator, press the [WATER] button on the control panel for 2~3 minutes to remove any air (bubble) in the pipes and drain out the initial water.
2) Check for the water leaks again through the water supply system (tubes, connectors and pipes) Rearrange the tubes again and do not move the refrigerator.

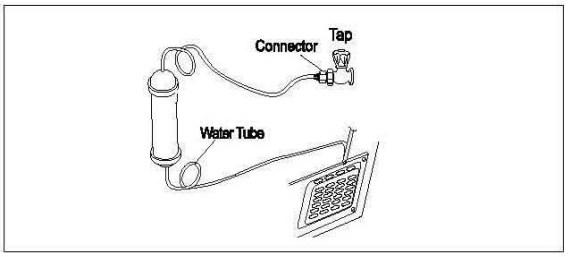

Downloaded from www.Manualslib.com manuals search engine

Internal filter type

WATER SUPPLY KIT

※Check the parts below for installing water supply. Some other necessary parts are available at your local service agents.

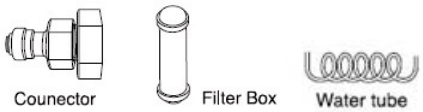

Installation Procedure
(Dispenser Models Only)

1. Join Connector to the tap water line

Figure A

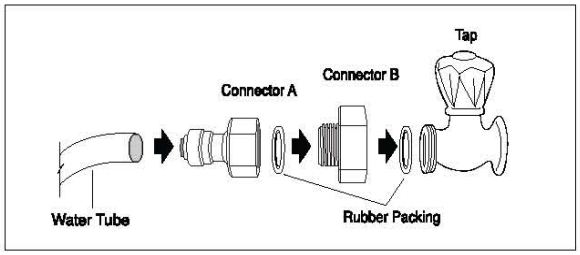

Figure B

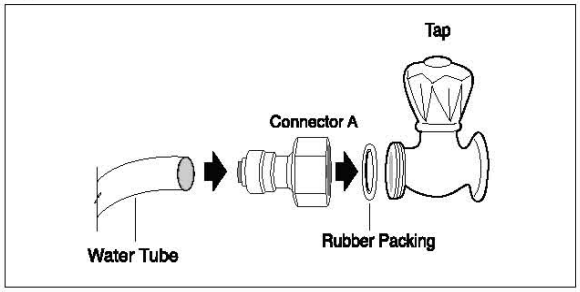

N.B. Place the rubber washer inside the tap connector and screw onto the water tap.

2. Connect check valve
   1) Cut water tube adequately which is connected with tap water.
   2) Insert end of cut water tube into a tube fixture of a refrigerator.

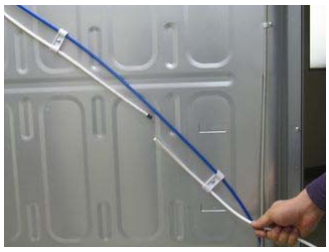

3) Using check valve, connect water tube. Caution! Check valve is used to protect back flow and connection between tube and assemble so that water supply direction
can not be assembled by reverse direction.

Figure shows water tube is correctly con

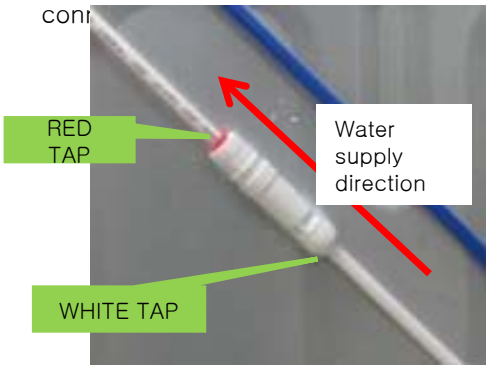

Downloaded from www.Manualslib.com manuals search engine

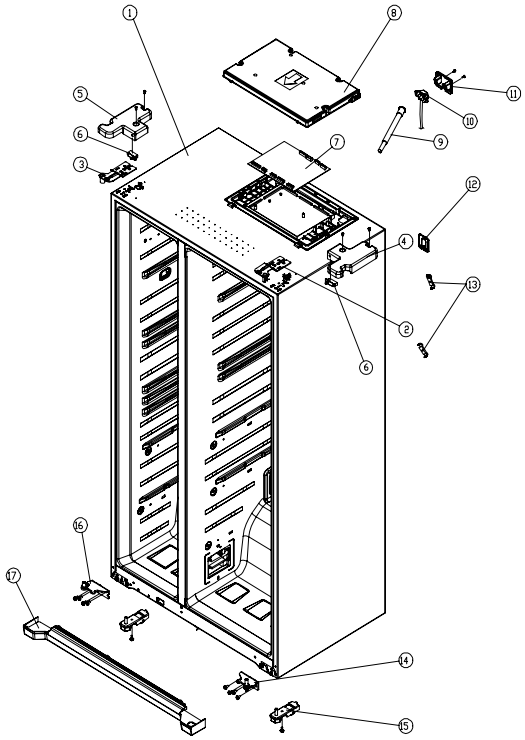

NO	PART-CODE	PART NAME	SPEC.	Q'ty		
				X22B..	22D../22E..	22F../22G..
1	-	ASSY CAB URT	-	1	1	1
2	**3012933100**	HINGE *T *R	PO T3.0+PAINT	1	1	1
3	**3012933000**	HINGE *T *L	PO T3.0+PAINT	1	1	1
4	**3001434900**	COVER HI *T *R	PP	1	1	1
5	**3001434800**	COVER HI *T *L	PP	1	1	1
6	**3001434800**	SWITCH H/BAR DR AS	SP101B-2DI	2	2	2
7	**3014HR070**	PCB MAIN AS	X22B	X	x	1
	30143HR080		22D/E	X	1	X
	30143HJ080		22D/E (Inverter Comp.)	X	1	X
	30143HR060		22F/G	X	X	1
	30143HJ060		22F/G (Inverter Comp.)	X	X	1
8	**3011446001**	COVER M/PCB BOX	PP(FB-72)	1	1	1
9	**3013226800**	HOSE ICE MAKER TUBE AS	220~240V/5W	x	1	1
	3013226810		110~127V/5W			
10	**3012540200**	GUIDE CAB W/TUBE A AS	X22.. MODEL	x	1	1
	3012519221		Y22.. MODEL	x	1	1
11	**3011444100**	COVER GUIDE CAB W/T A	PP	x	1	1
12	**3001424100**	COVER GUIDE CAB W/FILT	PP	x	1	1
13	**3011203200**	CLAMP W/TUBE C	HIPS	X	2	2
14	**3012933500**	HINGE *U *R AS		1	1	1
15	**3010673800**	BRACKET ADJ FOOT AS		1	1	1
16	**3012933400**	HINGE *U *L AS		1	1	1
17	**3001433900**	COVER CAB BRKT AS	PP	1	1	1

- Some parts can be chaged for improving their perfomance without notice.

No	Date	Note	Remark

Downloaded from www.Manualslib.com manuals search engine

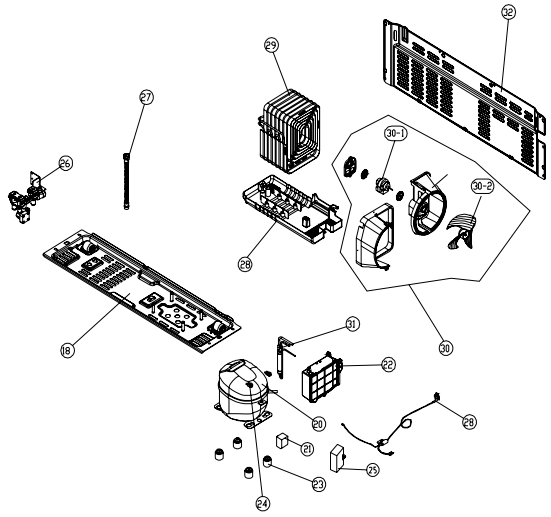

NO	PART-CODE	PART NAME	SPEC.	Q'ty		
				X22B..	22D../22E..	22F../22G..
18	**3010359600**	BASE COMP AS	ALL MODELS	1	1	1
19	**OPTION**	CORD POWER AS	COUNTRY Dependent	1	1	1
20	**3956183D40**	COMPRESSOR	MK183B-L2U(220V/60HZ)	1	1	1
	3956183D20		MK183D-L2U(110~127V)			
	3956183D50		MK183Q-L2U(220~240V/50Hz)			
	3956180910		EGX80HLC			
	3959115280		EU4A5Q-L2X			
	3956114M80		LQ140NAEM			
21	**3018129620**	SWITCH P RELAY AS	293SHB,J531Q(MK183B)	1	1	1
	3018129610		445PHB,J531Q(MK183D)			
	3018129600		265RHB,J531Q(MK183Q)			
	3018132600		4TM445KFB (R/C)			
	3018133800		4TM319SFB(EU4A5Q)			
	3018133900		4TM205RFB, 330M(LQ140NAEM)			
22	**3814300300**	BOX INVERTER AS	PP(EU4A5Q Only)	1	1	1
23	**3010101600**	ABSORBER COMP	NBR	4	4	4
24	**3016002500**	COMP WASHER	SK-5 T0.8	4	4	4
25	**3016406100**	CAPACITOR RUN	400VAC/5㎌ (WIRE,P2)	1	1	1
	3016405900		350VAC/5㎌ (WIRE, P2)			
	3016405020		250VAC/12㎌ (WIRE,P2)			
26	**3015406900**	VALVE WATER AS	220~240V(Y22..MODEL)	X	1	1
	3015406910		110~127V(Y22..MODEL)			
	3015402300		220~240V(X22..MODEL)			
	301542310		110~127V(X22..MODEL)			
27	**3013201700**	HOSE DRN B	PE FRB-5970NB	x	1	1
28	**3011199L00**	CASE VAPORI AS	FRX-621B	1	1	1
29	**3014467200**	PIPE WICON AS	TWS OD4.76*T0.7	1	1	1
30	**3018410500**	MOUTHBELL AS	FRX-621B	1	1	1
30-1	**3015920900**	MOTER C FAN	D4612AAA31	1	1	1
30-2	**3011836300**	FAN	PP OD3.17*D150	1	1	1
31	**3019808100**	DRYER AS	C1220T-M OD19.05*L135	1	1	1
32	**3001436500**	COVER MACH RM AS		1	1	1

- Some parts can be chaged for improving their perfomance without notice.

No	Date	Note	Remark

Downloaded from www.Manualslib.com manuals search engine

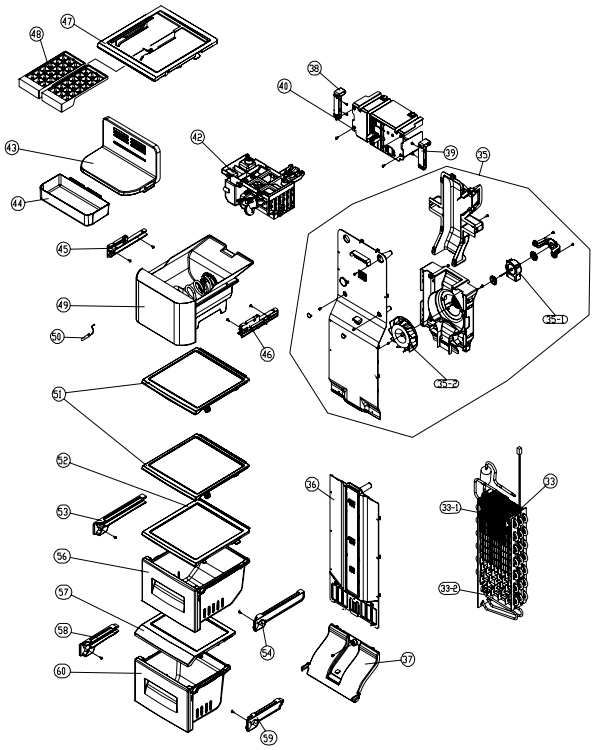

NO	PART-CODE	PART NAME	SPEC.	Q'ty		
				X22B..	22D../22E..	22F../22G..
33	**3017068900**	EVA AS	220-240V, 280W	1	1	1
	3017068910		110-127V, 250W			
33-1	**3014809500**	SENSOR D AS	PBN-43	1	1	1
33-2	**3012824210**	HEATER SHEATH AS	220-240V, 280W	1	1	1
	3012824220		110-127V, 250W			
35	**3018928600**	LOUVER F A AS	FRY-621B	1	1	1
35-1	**3015920700**	MOTOR F FAN AS		1	1	1
35-2	**3011836400**	FAN F		1	1	1
36	**3018928900**	LOUVER F B AS	FRY-621B	1	1	1
37	**3001434700**	COVER F RETURN	HIPS	1	1	1
38	**3012517800**	GUIDE G MOTR BRKT*L	ABS	X	1	1
39	**3012517900**	GUIDE G MOTR BRKT*R	ABS		1	1
40	**3010673600**	BRACKET GEARED MOTR AS	FRX-601D, 220-240V		1	1
	3010673610		FRX-601D, 110-127V			
42	**3012231400**	FRAME I/MAKER AS	FRX-601D		1	1
43	**3001435000**	COVER I/CRUSHER*T	HIPS		1	1
44	**3019058700**	POCKET I/CRUSHER COVER	GPPS		1	1
45	**3012538200**	GUIDE I/CRUSHER *L	ABS		1	1
46	**3012538100**	GUIDE I/CRUSHER *R	ABS		1	1
47	**3017851700**	SHELF F ICE AS	FRX-621B	1	X	X
48	**3011186300**	CASE ICING	PP	2	X	X
49	**3011199K00**	CASE I/CRUSHER AS	FRX-601D	X	1	1
50	**3014809300**	SENSOR F AS	PT-38	1	1	1
51	**3017851200**	SHELF F AS		2	2	2
52	**3001438000**	COVER F CASE*T AS		1	1	1
53	**3012514512**	GUIDE CASE A *L AS	FR-S580EG(PP)	1	1	1
54	**3012514612**	GIDUE CASE A *R AS	FR-S580EG(PP)	1	1	1
56	**3011124000**	CASE F*T AS		1	1	1
57	**3001434500**	COVER F CASE *U	HIPS	1	1	1
58	**3012529712**	GUIDE CASE C *L AS	FRU-571I(PP)	1	1	1
59	**3012529812**	GUIDE CASE C *R AS	FRU-571I(PP)	1	1	1
60	**3011124100**	CASE F*U AS	FRX-621B	1	1	1

- Some parts can be chaged for improving their perfomance without notice.

No	Date	Note	Remark

Downloaded from www.Manualslib.com manuals search engine

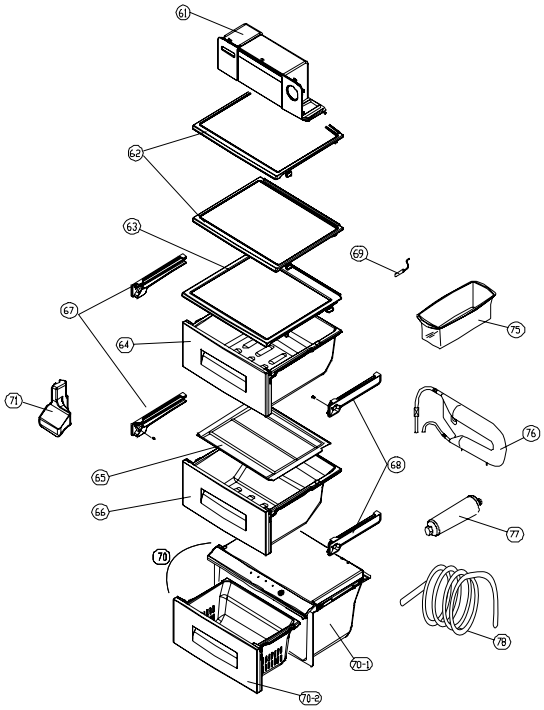

NO	PART-CODE	PART NAME	SPEC.	Q'ty		
				X22B..	22D../22F..	22E../22G..
61	**3001436900**	COVER DAMPER AS	FRS-X22B, FRS-X22D..	1	1	1
	3001436910		FRS-Y22D..	X		
62	**3017851300**	SHEPLF R AS	FRX-621B	2	2	2
63	**3001437200**	COVER VEGETB CASE AS	FRX-621B	2	2	1
64	**3011199N00**	CASE VEGETB*T AS		X	X	1
65	**3011446600**	COVER V/CASE A	GPPS	X	X	1
66	**3011199P00**	CASE VEGETB*M AS	FRX-621B	1	1	1
67	**3012514512**	GUIDE CASE A *L AS	FR-S580EG(PP)	1	1	2
68	**3012514612**	GIDUE CASE A *R AS	FR-S580EG(PP)	1	1	2
69	**3014809400**	SENSOR R AS	PBN-43B	1	1	1
70	**3010573700**	BOX CHANGE RM AS	FRX-601G	X	X	1
70-1	**3001437000**	COVER CHANGE RM AS	FRX-601G	X	X	1
70-2	**3011199M00**	CASE CHANGE RM AS	FRX-601G	X	X	1
71	**3001434700**	COVER F RETURN	HIPS	1	1	1
75	**3011171310**	CASE EGG AS	CASE+VINYL	1	1	1
76	**3018201000**	TANK WATER AS	FRU-541D	X	1	1
77	**3019974800**	S/PART FILT WATER AS	X22.. MODEL	X	1	1
	3019986700		Y22.. MODEL	X		
78	**3019974020**	S/PART W/TUBE AS	X22.. MODEL	X	1	1
	3019974070		Y22.. MODEL	X		

- Some parts can be chaged for improving their perfomance without notice.

No	Date	Note	Remark

Downloaded from www.Manualslib.com manuals search engine

F-DOOR (Middle Handle)

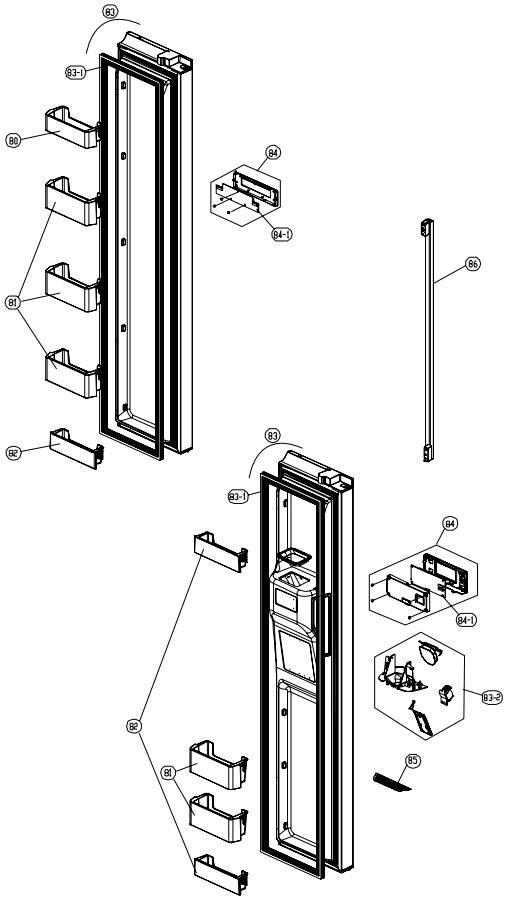

NO	PART-CODE	PART NAME	SPEC.	Q'ty		
				X22B1..	22D1../22F1..	22E1../22G1..
80	**3019058000**	POCKET F*T	GPPS	X	2	X
81	**3019057900**	POCKET F*M	GPPS	1	X	1
82	**3019058100**	POCKET F*U	GPPS	3	2	3
83	**30100A4H00**	ASSY F DR	X22B, TITANIUM PCM	1	X	X
	30100A4H10		X22B, TITANIUM VCM			
	30100A4H20		X22B, WHITE VCM			
	30100A4H40		X22B, SUS430			
	30100A4J00		X22D, TITANIUM PCM	X	1	1
	30100A4J10		X22D, TITANIUM VCM			
	30100A4J20		X22D, WHITE VCM			
	30100A4J40		X22D, SUS430			
83-1	**3012318860**	GASKET F DR AS	FRX-621B	1	1	1
83-2	**3010574300**	BOX DISPNS I/SHUT AS	220-240V/50Hz	X	1	1
	3010574310		110-127V/60Hz			
84	**3001433630**	COVER F PCB AS	FRX-22B..	1	X	X
	3014247000	PANEL *F CONTL AS	FRX-22D..	X	1	1
84-1	**30143HJ170**	PCB FRONT AS	FRX-22B..	1	X	X
	30143HJ160		FRX-22D..	X	1	1
85	**3012407800**	GRILLE DISPS	ABS	X	1	1
86	**3012653700**	HANDLE F DR AS	MIDDLE HANDLE	1	1	1

- Some parts can be chaged for improving their perfomance without notice.

No	Date	Note	Remark

Downloaded from www.Manualslib.com manuals search engine

F-DOOR (Long Handle)

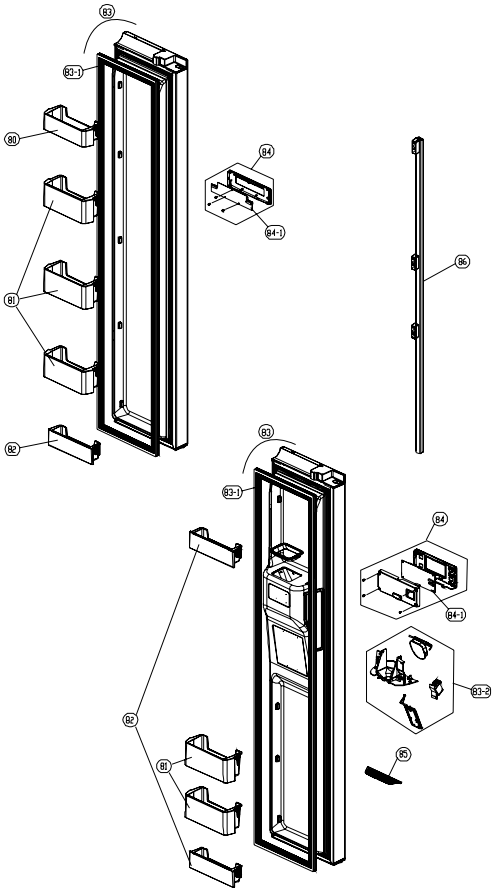

NO	PART-CODE	PART NAME	SPEC.	Q'ty		
				X22B2..	22D2../22F2..	22E2../22G2..
80	**3019058000**	POCKET F*T	GPPS	X	2	X
81	**3019057900**	POCKET F*M	GPPS	1	X	1
82	**3019058100**	POCKET F*U	GPPS	3	2	3
83	**30100A5H00**	ASSY F DR	X22B, TITANIUM PCM	1	X	X
	30100A5H10		X22B, TITANIUM VCM			
	30100A5H20		X22B, WHITE VCM			
	30100A5H40		X22B, SUS430			
	30100A5J00		X22D, TITANIUM PCM	X	1	1
	30100A5J10		X22D, TITANIUM VCM			
	30100A5J20		X22D, WHITE VCM			
	30100A5J40		X22D, SUS430			
83-1	**3012318860**	GASKET F DR AS	PVC+MAGNET	1	1	1
83-2	**3010574300**	BOX DISPNS I/SHUT AS	220-240V/50Hz	X	1	1
	3010574310		110-127V/60Hz			
84	**3001433630**	COVER F PCB AS	FRX-22B..	1	X	X
	3014247000	PANEL *F CONTL AS	FRX-22D..	X	1	1
84-1	**30143HJ170**	PCB FRONT AS	FRX-22B..	1	X	X
	30143HJ160		FRX-22D..	X	1	1
85	**3012407800**	GRILLE DISPS	ABS	X	1	1
86	**3012653710**	HANDLE F DR AS	LONG HANDLE	1	1	1

- Some parts can be chaged for improving their perfomance without notice.

No	Date	Note	Remark

Downloaded from www.Manualslib.com manuals search engine

R-DOOR (Middle Handle)

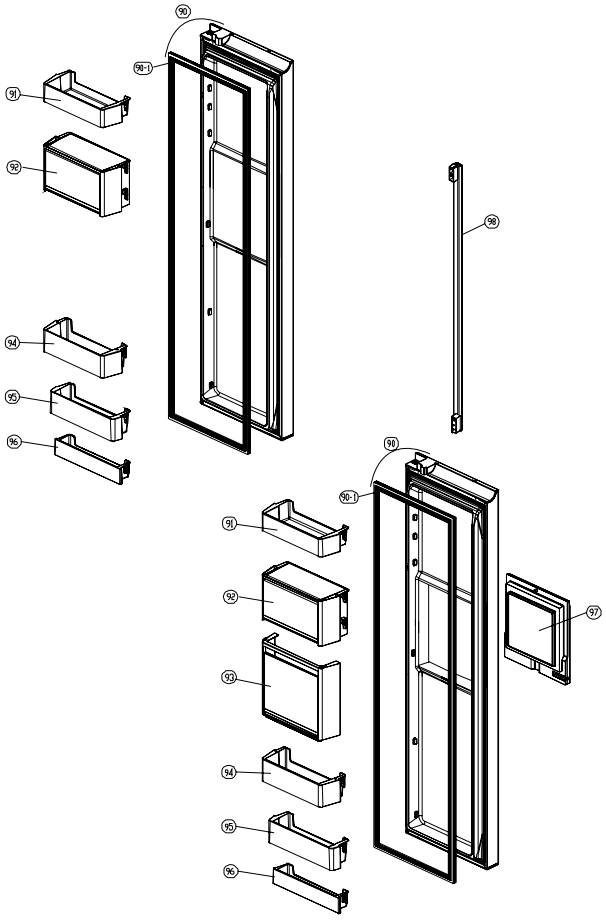

NO	PART-CODE	PART NAME	SPEC.	Q'ty	
				Non H/Bar Door	H/Bar Door
90	**30100A4K00**	ASSY R DR	X22B, TITANIUM PCM	1	X
	30100A4K10		X22B, TITANIUM VCM		
	30100A4K20		X22B, WHITE VCM		
	30100A4K40		X22B, SUS430		
	30100A4L00		X22D, TITANIUM PCM	X	1
	30100A4L10		X22D, TITANIUM VCM		
	30100A4L20		X22D, WHITE VCM		
	30100A4L40		X22D, SUS430		
90-1	**3012318960**	GASKET R DR AS	PVC+MAGNET	1	1
91	**3019058400**	POCKET R*T	GPPS	1	1
92	**3019058800**	POCKET MULTI AS	GPPS	1	1
93	**3011199J00**	CASE H/BAR AS	FRX-601G	X	1
94	**3019058600**	POCKET R H/BAR	GPPS	1	1
95	**3019058300**	POCKET R*M	GPPS	1	1
96	**3010058500**	POCKET R*U	GPPS	1	1
97	**3001707720**	DOOR H/BAR AS	TITANIUM	1	1
	3001707730		WHITE		
98	**3012653600**	HANDLE R DR AS	MIDDLE HANDLE	1	1

- Some parts can be chaged for improving their perfomance without notice.

No	Date	Note

Downloaded from www.Manualslib.com manuals search engine

R-DOOR (Long Handle)

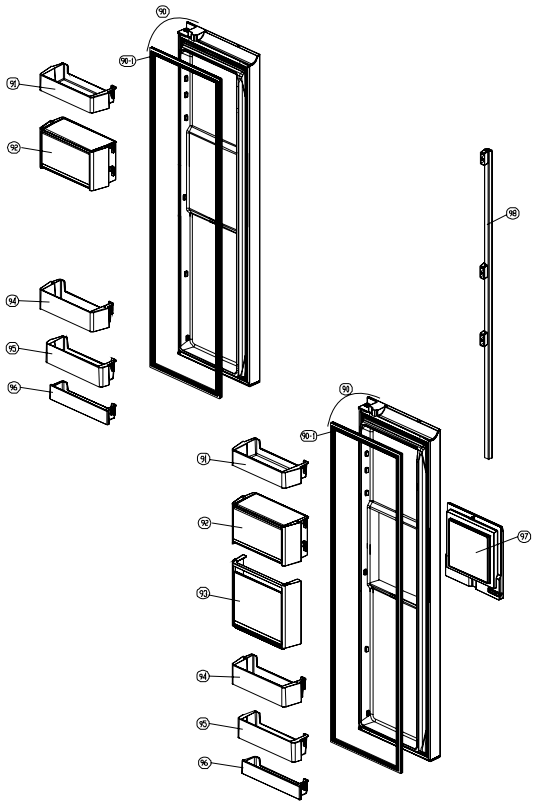

NO	PART-CODE	PART NAME	SPEC.	Q'ty	
				Non H/Bar Door	H/Bar Door
90	**30100A5K00**	ASSY R DR	X22B, TITANIUM PCM	1	X
	30100A5K10		X22B, TITANIUM VCM		
	30100A5K20		X22B, WHITE VCM		
	30100A5K40		X22B, SUS430		
	30100A5L00		X22D, TITANIUM PCM	X	1
	30100A5L10		X22D, TITANIUM VCM		
	30100A5L20		X22D, WHITE VCM		
	30100A5L40		X22D, SUS430		
90-1	**3012318960**	GASKET R DR AS	PVC+MAGNET	1	1
91	**3019058400**	POCKET R*T	GPPS	1	1
92	**3019058800**	POCKET MULTI AS	GPPS	1	1
93	**3011199J00**	CASE H/BAR AS	FRX-601G	X	1
94	**3019058600**	POCKET R H/BAR	GPPS	1	1
95	**3019058300**	POCKET R*M	GPPS	1	1
96	**3010058500**	POCKET R*U	GPPS	1	1
97	**3001707720**	DOOR H/BAR AS	TITANIUM	1	1
	3001707730		WHITE		
98	**3012653610**	HANDLE R DR AS	LONG HANDLE	1	1

- Some parts can be chaged for improving their perfomance without notice.

No	Date	Note

Downloaded from www.Manualslib.com manuals search engine