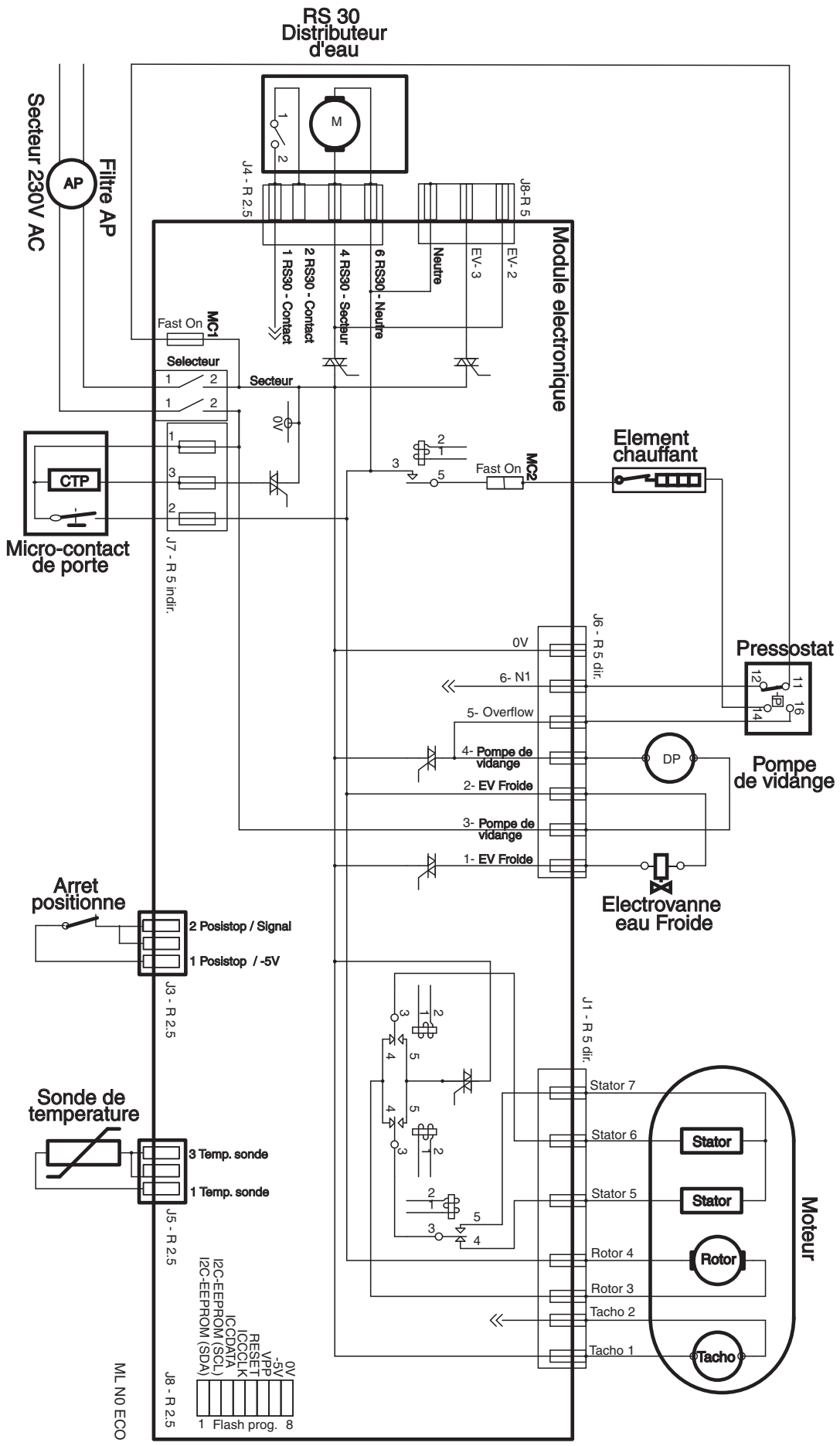

Owned by an entity of FAGOR GROUP / Copy prohibided