KENWOOD®

KT-800

QUARTZ SYNTHESIZER STEREO TUNER

SERVICE MANUAL

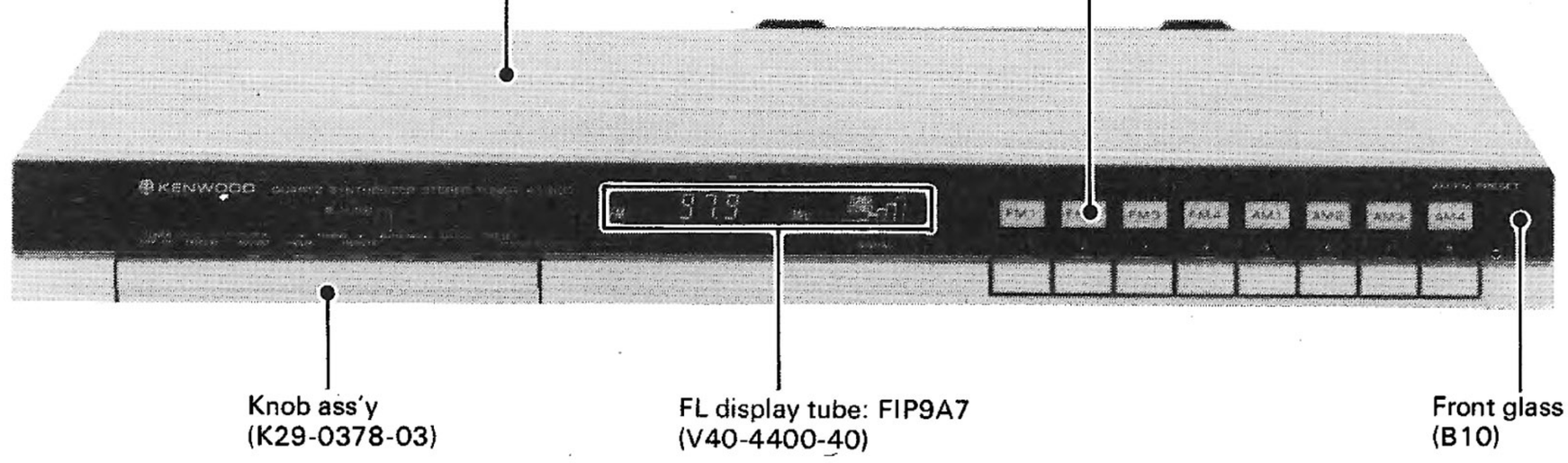

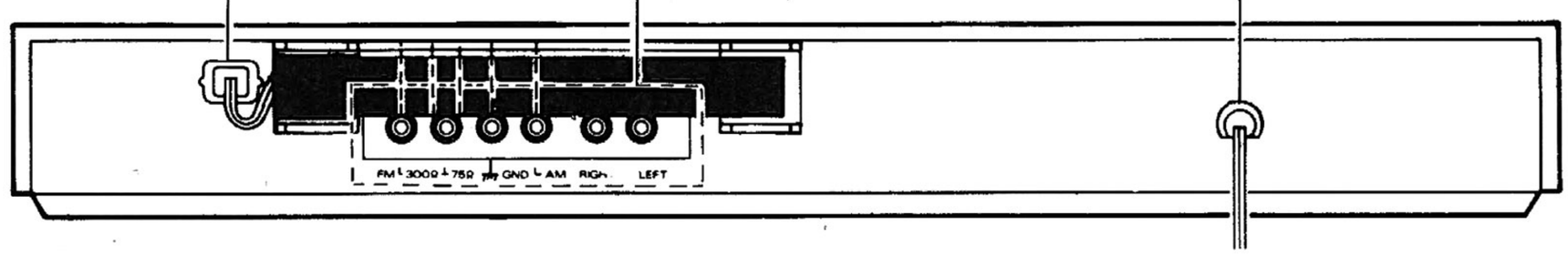

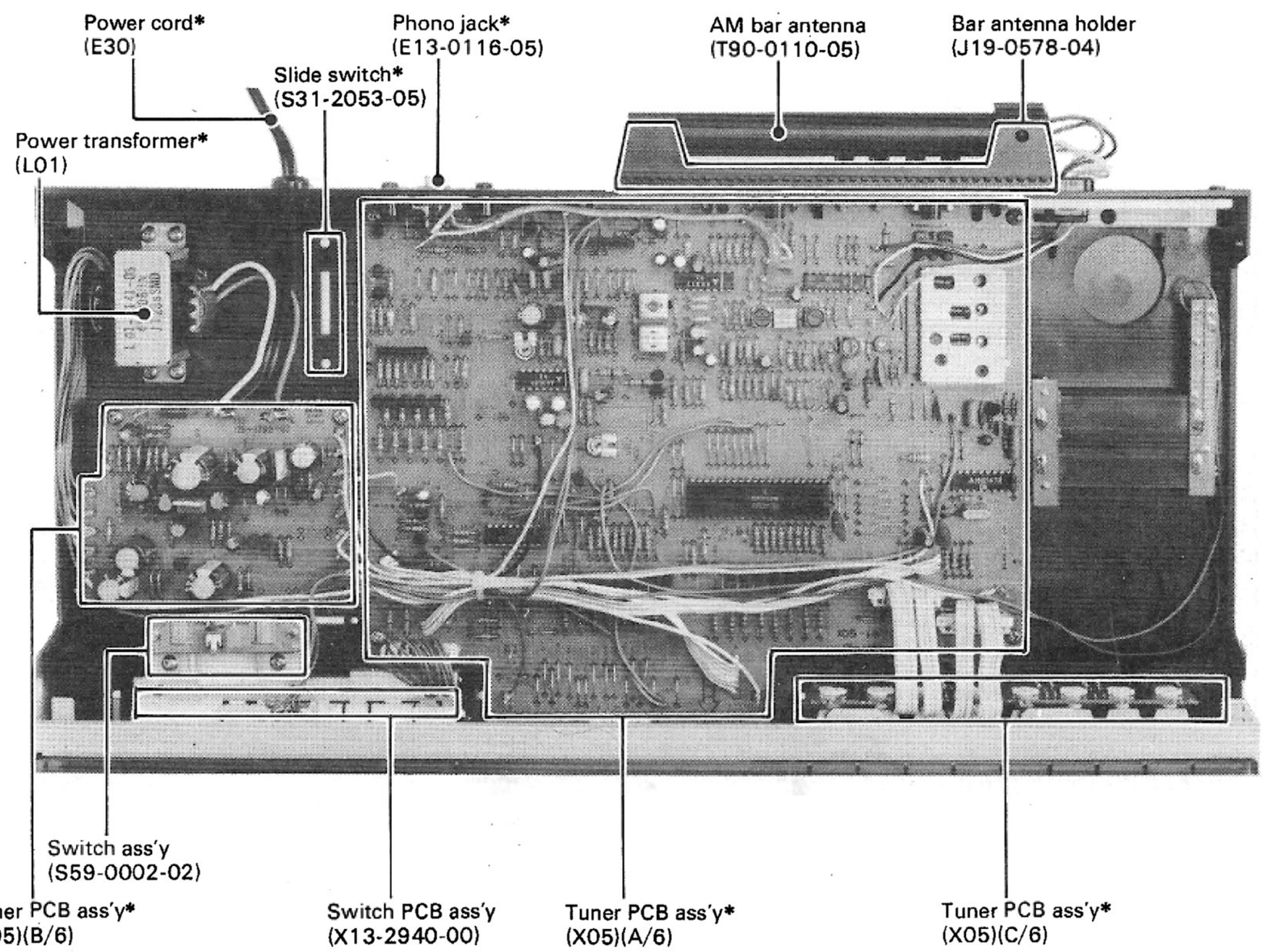

*Refer to parts list on page 8

www.hifiengine.com

EXPLODED VIEW

Refer to PARTS LIST on page 8.

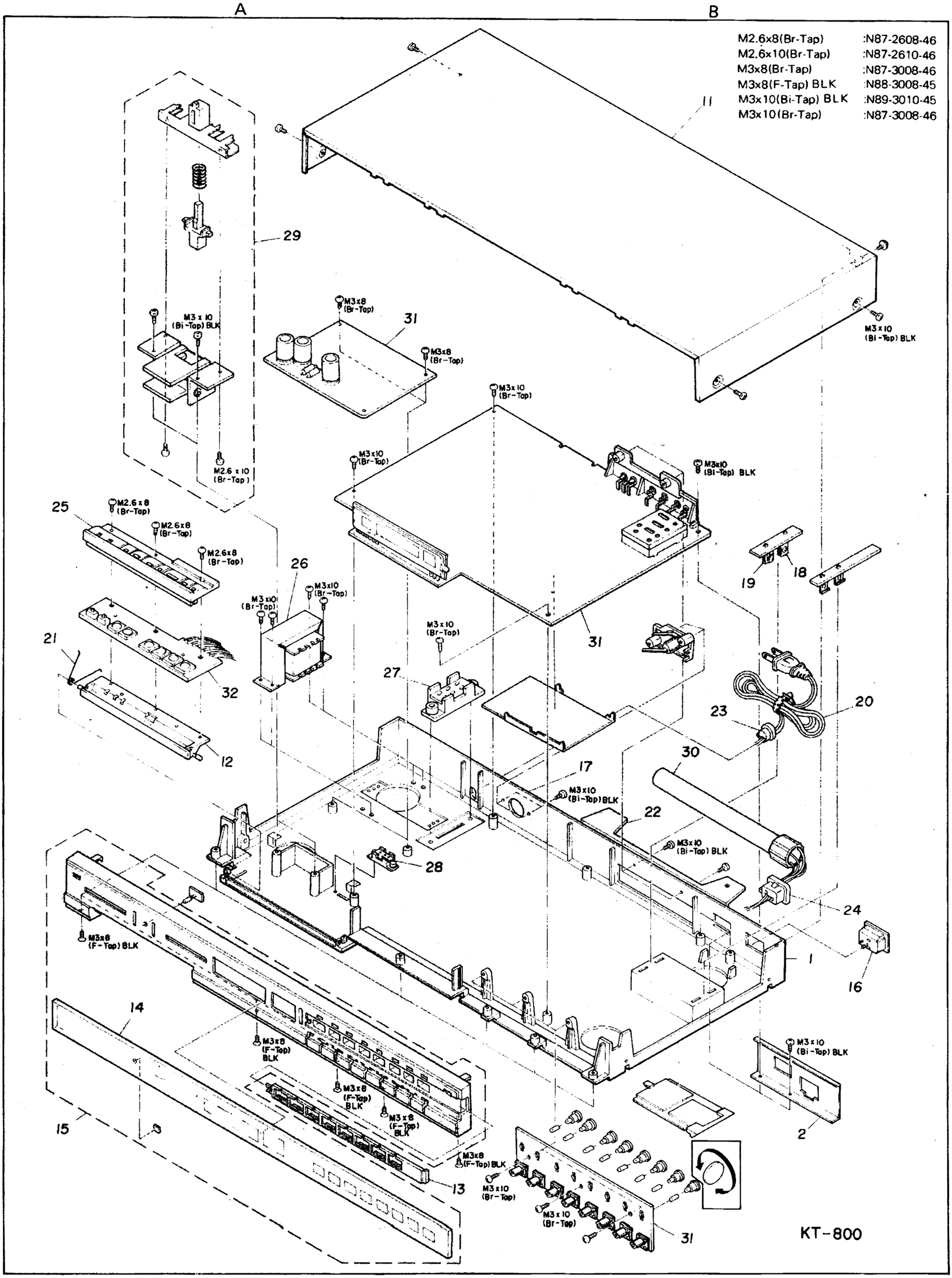

www.hifiengine.com

BLOCK DIAGRAM/NOTE for REPLACING CERAMIC FILTER

BLOCK DIAGRAM

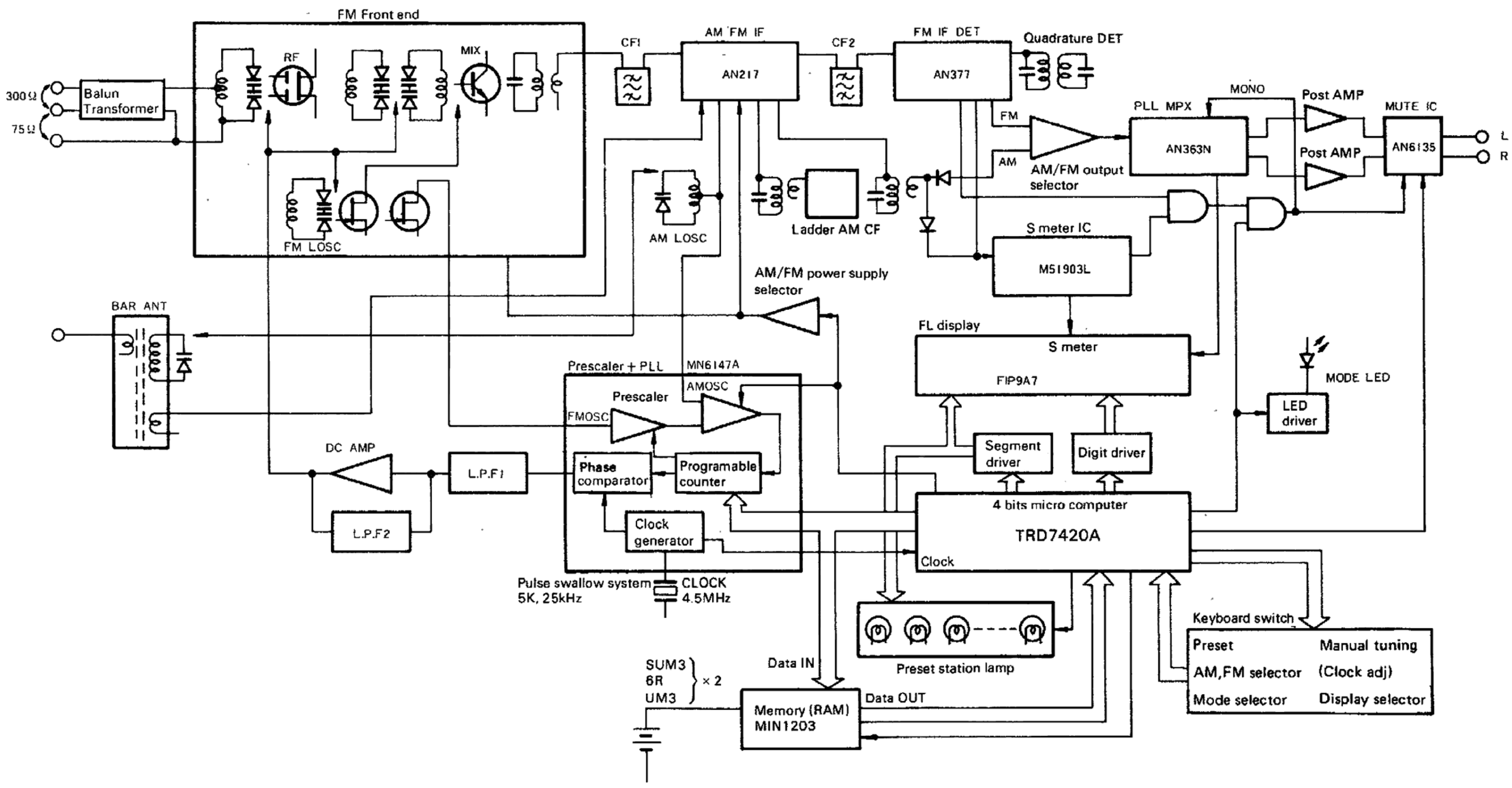

Note for Replacing Ceramic Filter

In model KT-800, the IF of FM is factory preset to 10.700 MHz. In areas whose FM channel spacing is 200 kHz. (mainly in the U.S.A), ceramic filters can be replaced with the following condition. The center frequency can be moved within ±75 kHz by 25 kHz step as shown in the table. After replacing both 10.700 MHz ceramic filters, add the following diodes.

Frequency (MHz)	Additional diodes
10.625	DA1, DA2
10.650	DA1, DA3
10.675	DA1, DA2, DA3
10.725	DA2
10.750	DA3
10.775	DA2, DA3

DA1 ~ DA3: 1S2076 or 1S1555

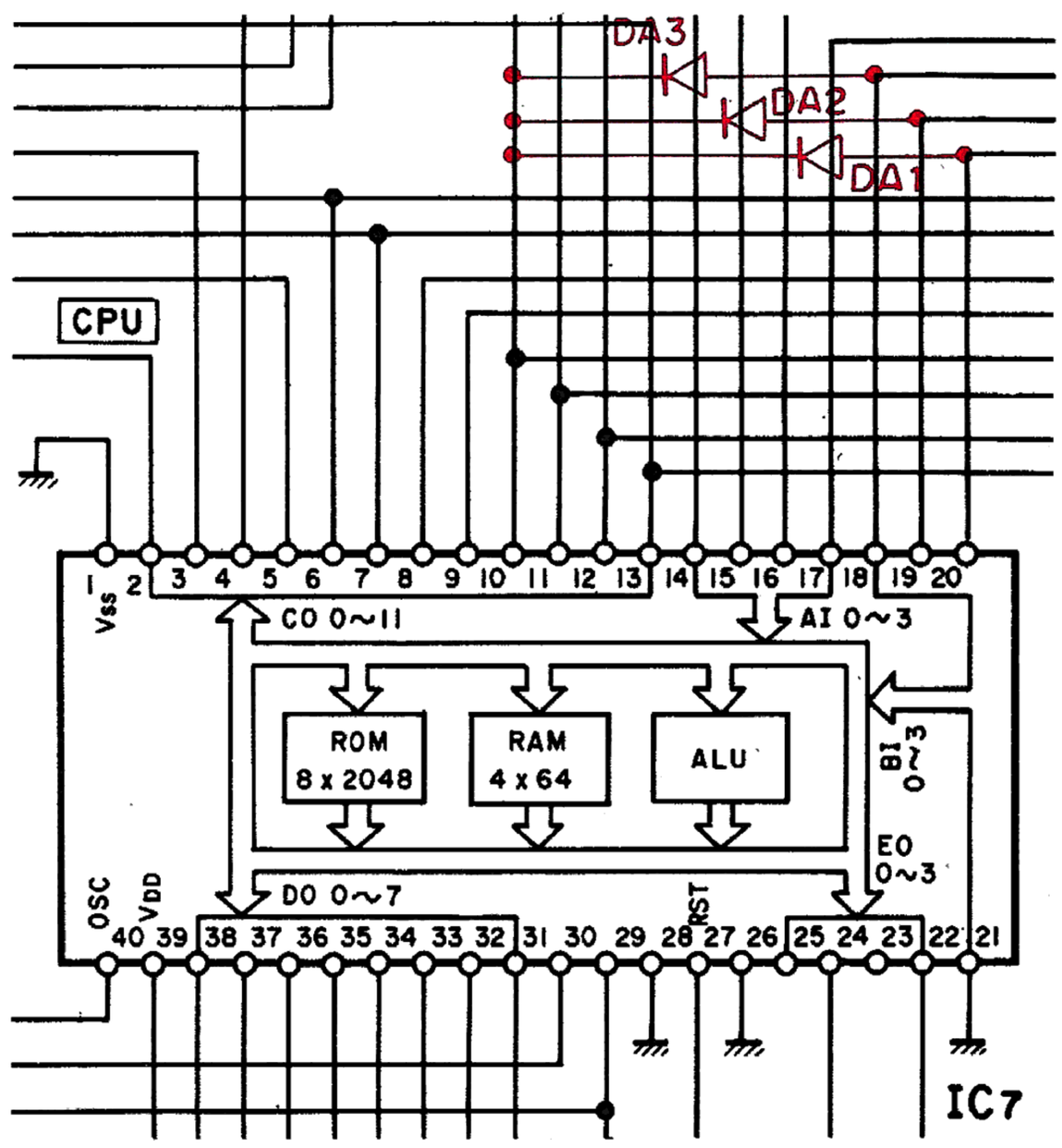

www.hifiengine.com

ADJUSTMENT

Refer to PC BOARD on page 6

NO.	ITEM	SYSTEM CONNECTIONS	TEST EQUIPMENT SETTING	TUNER (RECEIVER) SETTING	ALIGNMENT POINTS	ALIGN FOR	FIG. NO.
FM SECTION							
1	**DISCRIMI-NATOR (1)**	(A)/Connect a DC volt-meter to the end of R6	100.1 MHz 1 kHz ±75 kHz dev 60 dB (ANT input)	FM MONO 100.1 MHz	L1	0V	(1)
2	**DISCRIMI-NATOR (2)**	(A)/(B)	100.1 MHz 1 kHz ±75 kHz dev 60 dB (ANT input)	FM, MONO 100.1 MHz	L2	Minimum distortion	
3	**DISTORTION**	(A)/(B)	100.1 MHz 1 kHz±75 kHz dev 60 dB (ANT input)	FM MONO 100.1 Mhz	T1 (Front end)	Minimum distortion	
4	**VCO**	(A)/Connect a frequency counter to pin 13 of IC3	100.1 MHz 0 dev 60 dB (ANT input)	FM STEREO 100.1 MHz	VR2	Frequency: 19 kHz±50 Hz	(2)
VCO: Voltage Controlled Oscillator							
5	**SEPARATION**	(C)/(B)	100.1 MHz 1 kHz ±68.25 kHz dev Selector: L or R Pilot: ±6.75 kHz dev 60 dB (ANT input)	FM STEREO 100.1 MHz	VR1	Minimum crosstalk. A compromise adjustment may be required if left-to-right and right-to left separations are unequal.	
AM SECTION							
(1)	**RF ALIGNMENT (AM)**	(D)/Connect a DC volt meter to the collector of Q11	—	AM 530 kHz (531 kHz)	L3	DC voltage for ground: 1.5V	(3)
(2)	**RF ALIGNMENT (AM)**	(D)/(B)	630 kHz 400 Hz, 30% mod	AM 630 kHz	Bar antenna	Maximum amplitude and symmetry of the oscilloscope display.	
(3)	**RF ALIGNMENT (AM)**	(D)/(B)	1440 kHz 400 Hz, 30% mod	AM 1440 kHz	CT1	Maximum amplitude and symmetry of the oscilloscope display.	
Repeat alignments (2) and (3) several times.							
(4)	**IF TRANS-FORMER**	(D)/(B)	990 kH 400 Hz; 30% mod	AM 990 kHz	L4, 5	Maximum amplitude and symmetry of the oscilloscope display.	

Note 1:
Set the FM-SG frequency to the 100.1 MHz accurately with a frequency counter or marker oscillator.

Note 2:
Set the AM-SG frequency to be the desired frequency accurately with a frequency counter or marker oscillator.
If the frequency of your local station in close to 630,990 or 1440 kHz, receive one of these signal for tracking and IFT alignments.

www.hifiengine.com

REGLAGES

Voir panneau de circuit imprimé page 6.

N°	ITEM	RACCORDE-MENTS DU SYSTEME	REGLAGE DE L'APPAREILLAGE	REGLAGE DU TUNER (AMPLI-TUNER)	POINTS DE L'ALIGNE-MENT	ALIGNER POUR	FIG. N°
SECTION MF							
1	**DISCRIMI-NATEUR (1)**	(A)/Connecter un voltmètre CC à bout de R6.	100,1 MHz 1 kHz±75 kHz dév 60 dB (Entrée ANT)	FM MONO 100,1 MHz	L1	0V	**(1)**
2	**DISCRIMI-NATEUR**	(A)/(B)	100.1 MHz 1 kHz ±75 kHz dév 60 dB (Entrée ANT)	FM, MONO 100,1 MHz	L2	Distortion minimale	
3	**DISTORSION (STEREO)**	(A)/(B)	100,1 MHz 1 kHz±75 kHz dév 60 dB (Entrée ANT)	FM MONO 100,1 MHz	T1 (Tête H.T.)	Distorsion minimale	
4	**OSCILLATEUR CONTROLE PAR LA TENSION**	(A)/Connecter un compteur de fréquence à la fiche 13 de IC3	100.1 MHz 0 dév 60 dB (Entrée ANT)	FM STEREO 100,1 MHz	VR2	Fréquence: 19 kHz±50 Hz	**(2)**
5	**SEPARATION**	(C)/(B)	100,1 MHz 1 kHz ±68,25 kHz dév SELECTION: L ou R Signal pilote: ±6,75 kHz dév 60 dB (Entrée ANT)	FM STEREO 100,1 MHz	VR1	Diaphonie minimale. Un compromis de réglage peut être nécessaire si les séparations de gauche à droite et de droite à gauche sont inégales.	
SECTION MA							
(1)	**ALIGNEMENT H.T. (MA)**	(D)/Connecter un voltmètre CC au collecteur de Q11	±	AM 530 kHz (531 kHz)	L3	Tension continue pour terre: 1,5V	**(3)**
(2)	**ALIGNEMENT H.T. (MA)**	(D)/(B)	630 kHz 400 Hz, 30% mod	AM 630 kHz	Antenne	Amplitude et symétrie maximale de l'affichage de l'oscilloscope.	
(3)	**ALIGNEMENT H.T (MA)**	(D)/(B)	1440 kHz	AM 1440 kHz	CT1	Amplitude et symétrie maximale de l'affichage de l'oscilloscope.	
Répéter les alignements (2) et (3) plusieurs fois.							
(4)	**TRANS-FORMATEUR F.I.**	(D)/(B)	990 kHz 400 Hz, 30% mod	AM 990 kHz	L4, 5	Amplitude et symétrie maximale de l'affichage de l'oscilloscope.	

Remarque 1.
Par le compteur de fréquence ou par l'oscillateur étalon, réglez la fréquence FM-SG à 100,1 MHz.

Remarque 2.
Par le compteur de fréquence ou par l'oscillateur étalon, réglez la fréquence AM-SG. Lorsqu'ily a une station émettrice locale avec une fréquence proche de 630, 990, ou 1440 kHz, recevez ce signal pour capter et l'algnement IFT.

www.hifiengine.com

ABGLEICH

Siehe Tafel für gedruckte Schaltung Seit 6.

NR.	GEGENSTAND	SYSTEM-ANSCHLÜSSE	PRÜFEIN-RICHTUNG-EINSTELLUNG	TUNER (RECEIVER)-EINSTELLUNG	ABGLEICH-PUNKTE	ABGLEICHEN FÜR	ABB. NR.
UKW-ABTEILUNG							
1	**DISKRIMI-NATOR (1)**	(A)/Einen Gleich-spannungsmesser zum Ende von R6 anschließen	100,1 MHz 1 kHz ±75 kHz Hub 60 dB (ANT-Eingang)	FM MONO 100,1 MHz	L1	0V	**(1)**
2	**DISKRIMI-NATOR (2)**	(A)/(B)	100,1 MHz 1 kHz ±75 kHz Hub 60 dB (ANT-Eingang)	FM, MONO 100,1 MHz	L2	Minimaler Klirrfaktor	
3	**KLIRRFAKTOR (STEREO)**	(A)/(B)	100,1 MHz 1 kHz±75 kHz Hub 60 dB (ANT-Eingang)	FM MONO 100,1 MHz	T1 (Frontende)	Minimaler Klirfaktor	
4	**SPANNUNGS-GEREGELTER OSZILLATOR**	(A)/Einen Frequenz-messer zur stift von IC3 anschließen	100.1 MHz 0 Hub 60 dB (ANT-Eingang)	FM STEREO 100,1 MHz	VR2	Frequenz: 19 kHz±50 Hz	**(2)**
5	**STEREO KANAL TRENNUNG**	(C)/(B)	100,1 MHz 1 kHz ±68,25 kHz Hub Wähler: L oder R Pilotton: ±6,75 kHz Hub 60 dB (ANT-Eingang)	FM STEREO 100,1 MHz	VR1	Minimales Übersprechen Eine Ausgleichrege lung kann notwendig sein, falls links-zu-rechts und rechts-zu-links Tren-nungen ungleich sind.	
MW-ABTEILUNG							
(1)	**HF-ABGLEICH (MW)**	(D)/Einen Gleich-spannungsmesser zu	—	AM 530 kHz (531 kHz)	L3	Gleichspannung für Erde: 1,5V	**(3)**
(2)	**HF-ABGLEICH (MW)**	(D)/(B)	630 kHz 400 Hz, 30% mod	AM 630 kHz	Antenne	Maximale Ampltude und Symmetrie des Oszilloskopbildes.	
(3)	**HF-ABGLEICH (MW)**	(D)/(B)	1440 kHz 400 Hz, 30% mod	AM 1440 kHz	CT1	Maximale Amplitude und Symmetrie des Oszilloskopbildes.	
Abstimmungen (2) und (3) mehrere Male wiederholen.							
(4)	**ZF-ÜBERTRAGER**	(D)/(B)	990 kHz 400 Hz, 30% mod	AM 990 kHz	L4, 5	Maximale Amplitude und Symmetrie des Oszilloskopbildes.	

Anmerkung 1:
Die UKW-Meßsenderfrequenz mit Hilfe eines Frequenzzählers oder, Frequenzmarkenoszillators genau einstellen.

Anmerkung 2:
Die MW-Meßsenderfrequenz mit Hilfe eines Frequenzzählers oder Frequenzmarkenoszillators einstellen. Strahlt der Ortssender Sendungen mit einer Frequenz nahe 630, 990 oder 1440 kHz aus, diese für die Einstellung empfangen.

www.hifiengine.com

PC BOARD

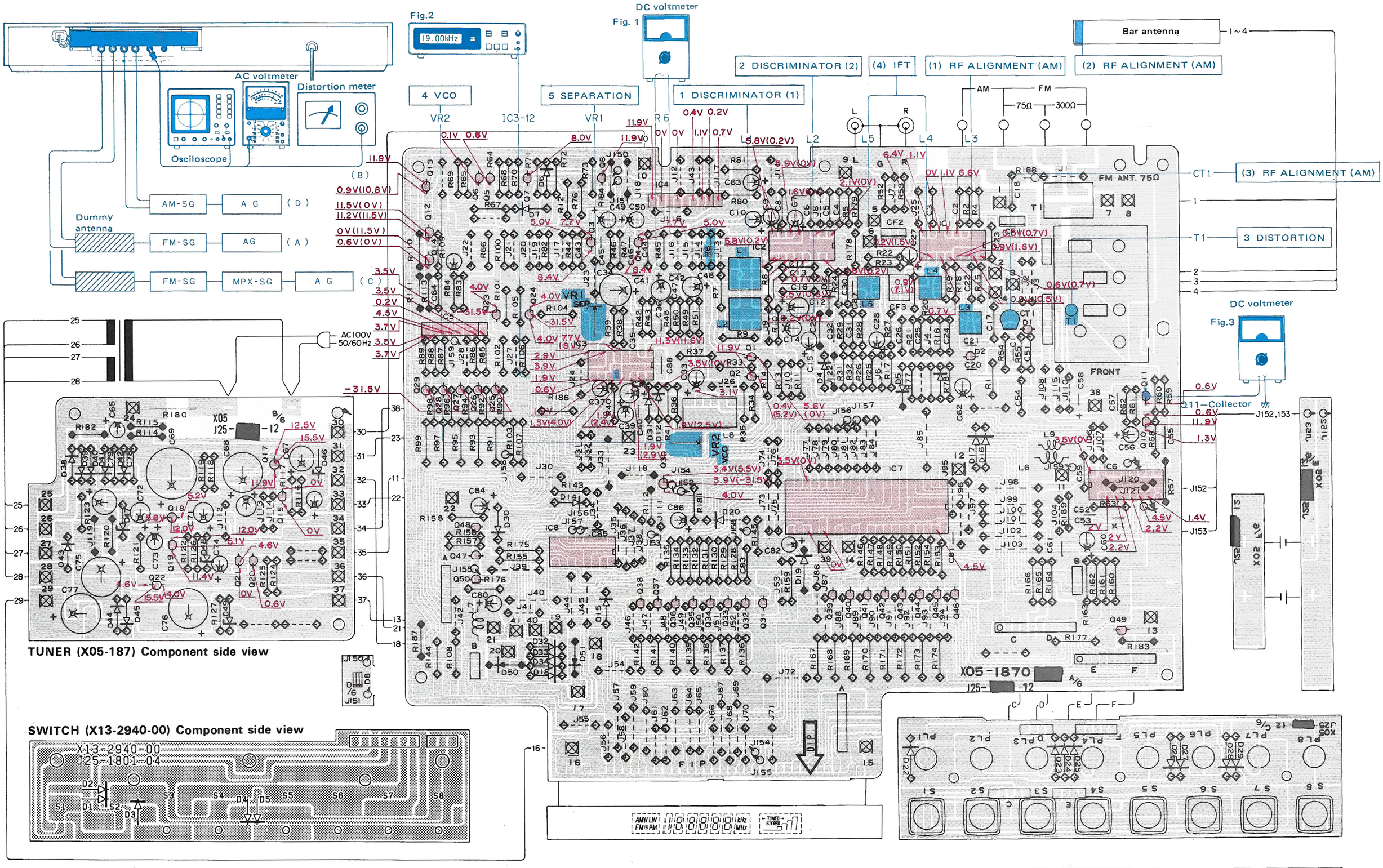

	Q22 Q18,19		Q21,20 Q17,15		Q12~14 IC5 Q6,5 Q29,28,27,26,25 Q23 Q47,48,50		Q7 Q24		Q3,8 IC8	Q4 IC3 Q38, 37, 36, 35, 34, 33, 32, 31	IC4 Q30		Q1,2	IC2	IC7 Q39, 40, 41, 42, 43, 44, 45, 46		IC1	IC6 Q10,11 Q49
D38,39,40,41 D43 D44,45		D47	D48 D49	D46		D30 D50	D7 D6 D32~34 D18 D51	D14	D15	D31,12	D20	D19	D3 D4		D5		D17,16	D23~25 D26,27 D28,29

Refer to schematic for the value of capacitors and resistors.

KENWOOD

QUARTZ SYNTHESIZER STEREO TUNER

KT-800

2SA733A 2SC1685
2SA999 2SC2274K
2SA1127NC 2SC2320
2SC945

2SD330

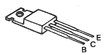

AN6135

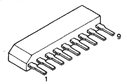

AN217 AN377
AN363N MN1203

M51903L

MN6147

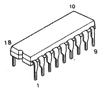

TRD7420A

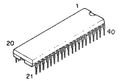

Semiconductor Substitutions	
Name	**Substitutions**
2SA1127NC(R, S)	2SA564A(R, S), 2SA640(E, F), 2SA1029(C, D), 2SA836 (C, D, E), 2SA733(A)(Q, P), 2SA999(F)
2SC1685 (R, S)	2SC828(R, S), 2SC2003(K), 2SC2274K(F), 2SC1222(E), 2SC2320(F), 2SC945(Q, P)
2SD330	2SC1913, 2SC789(O, Y), 2SC1061
1SV100-T	———
XZ-122	WZ-125, CZ-122, EQA01-12S$_1$
IS2076A	IS1553, W06B, IN4448
W06B	V06B, W06C
XZ-060	WZ-061, CZ-060, EQA01-06S$_2$
XZ-051	WZ-050, CZ-051, EQA01-05S$_2$
IS-2076	IS1555, WG713

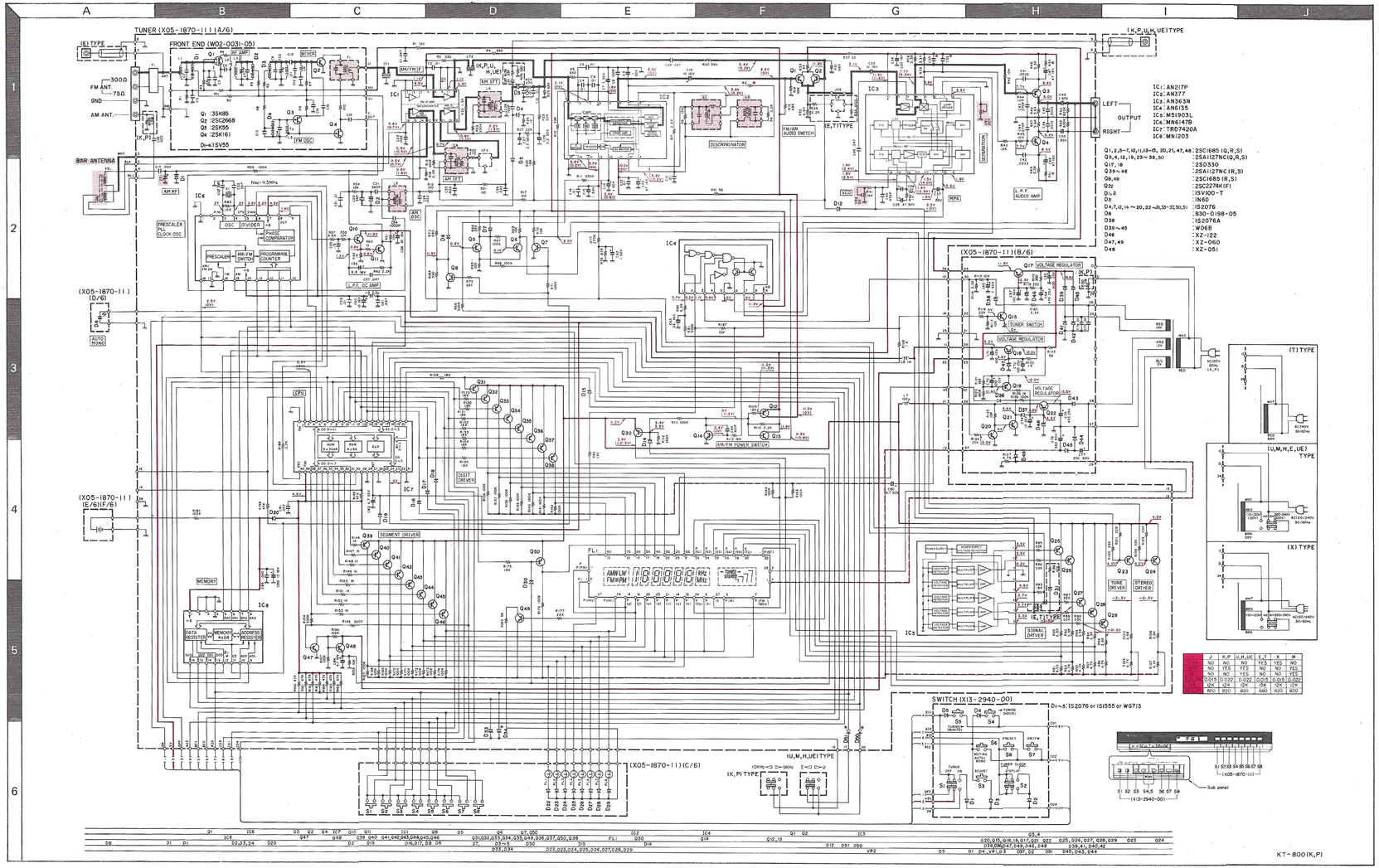

SPECIFICATIONS

FM TUNER SECTION

Usable sensitivity	10.8 dBf (1.9 μV)
50 dB Quieting Sensitivity	
Mono	16.4 dBf (3.6 μV)
Stereo	38.4 dBf (46 μV)
Signal to Noise Ratio	
Mono	74 dB
Stereo	71 dB
Total Harmonic Distortion	
Mono 100 Hz	0.07%
1,000 Hz	0.07%
6,000 Hz	0.11%
50 ~ 10,000 Hz	0.12%
Stereo 100 Hz	0.15%
1,000 Hz	0.09%
6,000 Hz	0.14%
50 ~ 10,000 Hz	0.4%
Capture Ratio	1.5 dB
Alternate Channel Selectivity	60 dB
Stereo Separation	
1,000 Hz	50 dB
50 ~ 10,000 Hz	40 dB
15,000 Hz	36 dB
Frequency Response	30 Hz to 15.000 Hz +0.2 dB, −2 dB
Spurious Response Ratio	110 dB
Image Response Ratio	80 dB
IF Response Ratio	90 dB
AM Suppression Ratio	60 dB
Antenna Impedance	300 ohms balanced and 75 ohms unbalanced
FM Frequency Range	88 MHz to 108 MHz
Output Level (1,000 Hz 100% Mod.)	0.75V/5.6 kiloohms

AM TUNER SECTION

Usable Sensitivity	18 μV
Signal to Noise Ratio	50 dB
Image Rejection	40 dB
Selectivity	50 dB
Output Level (400 Hz 30% Mod.)	0.25V/5.6 kiloohms

GENERAL

Power Requirements	60 Hz 120V (U.S.A. and Canada Model) or 50/60 Hz 110-120/220-240V switchable
Power Consumption	0.1A (UL and CSA) 7W (Others)
Dimensions	W: 440 mm (17-5/16") H: 52 mm (2-1/32") D: 247 mm (9-23/32")
Weight (Net)	2.2 kg (4.8 lb)

Kenwood follows a policy of continuous advancements in development. For this reason specifications may be changed without notice.

Kenwood poursuit une politique de progrès constants en ce qui concerne le développement. Pour cette raison, les spécifications sont sujettes à modifications sans préavis.

Kenwood strebt ständige Verbesserungen in der Entwicklung an. Daher bleiben Änderungen der technischen Daten jederzeit vorbehalten.

DC voltage is measured with a 25 kΩ/V VOM

; FM MONO 60 dB (ANT.)

( ); AM 60 dB (ANT.)

: Alignment points

PARTS LIST

INSTRUCTION FOR PARTS LIST

Ref. No. 参照番号	Parts No. 部品番号	Description 部品名／規格	Re-marks 備考
②			
① 18 1A	A01-0608-12	METALLIC CABINET	* ③
19 2A	A20-1979-11	FRONT PANEL ASSY	*K ④
19 2A	A20-1979-11	FRONT PANEL ASSY	PM
19 2A	A20-1979-11	FRONT PANEL ASSY	SU
19 2A	A20-1979-11	FRONT PANEL ASSY	XW
⑤ R221	R43-1333-15	FL-PROOF RD330 J 2H	* ⑥
R222	R43-1368-15	FL-PROOF RD680 J 2H	*
VR1 ,2	R12-3301-05	TRIMMING POT. 20K(B)	
VR3 ,4	R19-4305-05	POTENTIOMETER (OUTPUT)	*
VR5 ,6	R12-2302-05	TRIMMING POT. 5K(B)	

① Exploded view drawing No.
② Position in exploded view.
③ Symbol of new parts.
④ Area to which parts are shipped. Example: A20-1390-13 is the part No. of FRONT PANEL ASS'Y for the "K" type products (for U.S.A.). When this column is blank, it means that the same type of parts (same parts No.) are used for the products shipped to all areas.
⑤ Reference No. in schematic diagram.
⑥ Abbreviation of "Flame-proof carbon film resistor"

All capacitors and resistors are listed using abbreviations. Abbreviations.

* Abbreviations of capacitors (Parts No. with initial letter "C").

ELECTRO ..... Electrolytic capacitor
LL-ELEC ..... Low leak electrolytic capacitor
NP-ELEC ..... Non-pole electrolytic capacitor
MICA ..... Mica capacitor
POLYSTY ..... Polystyrene capacitor
MYLAR ..... Mylar capacitor
CERAMIC ..... Ceramic capacitor
TANTAL ..... Tantalum capacitor
MF ..... Metallized film capacitor
MP ..... Metallized paper capacitor
OIL ..... Oil capacitor

The unit "UF" is used in lieu of "μF"

* Abbreviations of resistors (Parts No. with initial letters "R").

RC ..... Carbon composition resistor
RD ..... Carbon film resistor
FL-PROOF RD ..... Flame-proof carbon film resistor
RW ..... Wire wound power resistor
FL-PROOF RS ..... Flame-proof metal oxide film resistor
RN ..... Metal film resistor
FUSE-RESIST ..... Resistor with fuse function
2B ..... Rated wattage 1/8W
2E ..... Rated wattage 1/4W
2H ..... Rated wattage 1/2W
3A ..... Rated wattage 1W
3D ..... Rated wattage 2W
3F ..... Rated wattage 3W
3G ..... Rated wattage 4W
3H ..... Rated wattage 5W

All resistor values are indicated with the unit (Ω) omitted.

* Abbreviations common to capacitors and resistors.

C ..... ±0.25pF (Used for capacitors only)
D ..... ±0.5pF (Used for capacitors only)
F ..... ±1%
G ..... ±2%
J ..... ±5%
K ..... ±10%
M ..... ±20%
Z ..... +80%, −20%(Used for capacitors only)
P ..... +100%, −0%(Used for capacitors only)

Resistors RD (carbon composition resistors) are not listed in the parts list. For values, refer to the schematic diagram.

Ref. No. 参照番号	Parts No. 部品番号	Description 部品名／規格	Re-marks 備考
KT-800 UNIT			
1 3B	-	MAIN CHASSIS	
2 3B	-	MOUNTING HARDWARE	
11 1B	A01-0387-03	METALLIC CABINET	*T
11 1B	A01-0388-03	METALLIC CABINET	*K
11 1B	A01-0388-03	METALLIC CABINET	PU
11 1B	A01-0388-03	METALLIC CABINET	MH
11 1B	A01-0388-03	METALLIC CABINET	X
11 1B	A01-0388-03	METALLIC CABINET	UE
11 1B	A01-0389-03	METALLIC CABINET	*E
12 2A	A11-0089-13	SUB CHASSIS	*
-	B42-0762-04	STATION TABS SHEET	*
-	B46-0055-30	WARRANTY CARD	P
-	B46-0060-00	WARRANTY CARD	T
-	B46-0061-30	WARRANTY CARD	K
-	B46-0062-30	WARRANTY CARD	UH
-	B46-0062-30	WARRANTY CARD	UE
-	B46-0063-13	WARRANTY CARD	UH
-	B46-0063-13	WARRANTY CARD	UE
-	B46-0064-20	WARRANTY CARD	X
-	B50-3227-00	INSTRUCTION MANUAL(ENG)	*K
-	B50-3227-00	INSTRUCTION MANUAL(ENG)	PU
-	B50-3227-00	INSTRUCTION MANUAL(ENG)	MH
-	B50-3227-00	INSTRUCTION MANUAL(ENG)	X
-	B50-3227-00	INSTRUCTION MANUAL(ENG)	UE
-	B50-3228-00	INSTRUCTION MANUAL(FRE)	*P
-	B50-3228-00	INSTRUCTION MANUAL(FRE)	MX
-	B50-3229-00	INSTRUCTION MANUAL(SPN)	*M
-	B50-3230-00	INSTRUCTION MANUAL	*T
-	B50-3231-00	INSTRUCTION MANUAL	*E
-	B59-0018-00	SERVICE STATIONS LIST	UH
-	B59-0018-00	SERVICE STATIONS LIST	UE
13 3A	B07-0344-03	ESCUTCHEON	*
14 3A	B10-0277-03	FRONT GLASS	*K
14 3A	B10-0277-03	FRONT GLASS	PU
14 3A	B10-0277-03	FRONT GLASS	MH
14 3A	B10-0277-03	FRONT GLASS	XE
14 3A	B10-0277-03	FRONT GLASS	UE
14 3A	B10-0278-03	FRONT GLASS	*T
15 3A	B10-0290-03	FRONT GLASS ASSY	*K
15 3A	B10-0290-03	FRONT GLASS ASSY	PU
15 3A	B10-0290-03	FRONT GLASS ASSY	MH
15 3A	B10-0290-03	FRONT GLASS ASSY	XE
15 3A	B10-0290-03	FRONT GLASS ASSY	UE
15 3A	B10-0291-03	FRONT GLASS ASSY	*T
-	E30-0505-05	AUDIO CORD	
-	E90-0020-05	INSULATING COVER	KP
-	E90-0020-05	INSULATING COVER	UH
-	E90-0020-05	INSULATING COVER	E
-	E90-0020-05	INSULATING COVER	UE
16 3B	E04-0004-05	RECEPTACLE (FM ANTENNA)	E
17 2B	E13-0116-05	PHONO JACK (AM IF OUT)	KP
17 2B	E13-0116-05	PHONO JACK (AM IF OUT)	UH
17 2B	E13-0116-05	PHONO JACK (AM IF OUT)	UE
18 2B	E23-0112-04	TERMINAL (BATTERY *)	
19 2B	E23-0113-04	TERMINAL (BATTERY -)	
20 2B	E30-0181-05	POWER CORD	KP
20 2B	E30-0459-05	POWER CORD	E
20 2B	E30-0545-05	POWER CORD	UM
20 2B	E30-0545-05	POWER CORD	H
20 2B	E30-0545-05	POWER CORD	UE
20 2B	E30-0587-05	POWER CORD	T
	E30-0649-05	POWER CORD	X

www.hifiengine.com

PARTS LIST

Ref. No. 参照番号	Parts No. 部品番号	Description 部品名／規格	Remarks 備考
21 2A	G01-0406-04	COILED SPRING	*
-	H01-3209-04	CARTON BOX	*T
-	H01-3210-04	CARTON BOX	*U
-	H01-3210-04	CARTON BOX	MH
-	H01-3210-04	CARTON BOX	X
-	H01-3210-04	CARTON BOX	UE
-	H01-3212-04	CARTON BOX	*E
-	H01-3257-04	CARTON BOX	*K
-	H01-3257-04	CARTON BOX	P
-	H10-1558-03	POLYSTYRENE FIXTURE	*
-	H25-0078-04	BAG (235X315)	UH
-	H25-0078-04	BAG (235X315)	UE
-	H25-0179-04	BAG (530X450)	
22 2B	J19-0578-04	BAR ANTENNA HOLDER	
23 2B	J41-0017-05	BUSHING (POWER CORD)	TE
23 2B	J42-0072-05	BUSHING (POWER CORD)	KP
23 2B	J42-0072-05	BUSHING (POWER CORD)	UM
23 2B	J42-0072-05	BUSHING (POWER CORD)	H
23 2B	J42-0072-05	BUSHING (POWER CORD)	UE
23 2B	J42-0074-05	BUSHING (POWER CORD)	X
24 3B	J42-0084-05	BUSHING (ANT.CORD)	
25 2A	K29-0378-03	KNOB ASSY	*
26 2A	L01-2141-05	POWER TRANSFORMER	*K
26 2A	L01-2141-05	POWER TRANSFORMER	P
26 2A	L01-2142-05	POWER TRANSFORMER	*T
26 2A	L01-2145-05	POWER TRANSFORMER	*U
26 2A	L01-2145-05	POWER TRANSFORMER	MH
26 2A	L01-2145-05	POWER TRANSFORMER	X
26 2A	L01-2145-05	POWER TRANSFORMER	UE
26 2A	L01-2146-05	POWER TRANSFORMER	*E
27 2A	S31-2053-05	SLIDE SWITCH (POWER)	UM
27 2A	S31-2053-05	SLIDE SWITCH (POWER)	HX
27 2A	S31-2053-05	SLIDE SWITCH (POWER)	E
27 2A	S31-2053-05	SLIDE SWITCH (POWER)	UE
28 3A	S31-2057-05	SLIDE SWITCH (FREQ.)	KP
28 3A	S31-2057-05	SLIDE SWITCH (FREQ.)	UM
28 3A	S31-2057-05	SLIDE SWITCH (FREQ.)	H
28 3A	S31-2057-05	SLIDE SWITCH (FREQ.)	UE
29 1A	S59-0002-02	SWITCH ASSY	*
-	T90-0202-05	FM INDOOR ANTENNA	
30 2B	T90-0110-05	AM BAR ANTENNA	*
31 2B,3B	X05-1870-11	TUNER PCB ASSY	*K
31 2B,3B	X05-1870-11	TUNER PCB ASSY	P
31 2B,3B	X05-1870-21	TUNER PCB ASSY	*M
31 2B,3B	X05-1870-71	TUNER PCB ASSY	*X
31 2B,3B	X05-1870-81	TUNER PCB ASSY	*U
31 2B,3B	X05-1870-81	TUNER PCB ASSY	H
31 2B,3B	X05-1870-81	TUNER PCB ASSY	UE
31 2B,3B	X05-1872-71	TUNER PCB ASSY	*T
31 2B,3B	X05-1872-71	TUNER PCB ASSY	E
32 2A	X13-2940-00	SWITCH PCB ASSY	*

TUNER (X05-187*—**)

D8	B30-0198-05	LED (RED)	
PL1 -8	B30-0257-05	LAMP	*
C1	C55-1747-38	CERAMIC 0.047UF Z	
C2 -6	C91-0083-05	CERAMIC 0.01UF N	
C7	C25-1710-57	LL-ELEC 1UF 50WV	*
C8	C71-1710-15	CERAMIC 100PF J	
C9	C25-1710-57	LL-ELEC 1UF 50WV	
C10	C24-1210-69	ELECTRO 10UF 16WV	
C11	C91-0083-05	CERAMIC 0.01UF N	
C12	C24-1247-61	ELECTRO 47UF 16WV	
C13	C91-0083-05	CERAMIC 0.01UF N	
C14 ,15	C25-1710-57	LL-ELEC 1UF 50WV	
C16	C91-0083-05	CERAMIC 0.01UF N	
C17 ,18	C91-0085-05	CERAMIC 0.022UF N	
C20	C63-1739-05	CERAMIC 39PF J	
C21	C47-1756-15	POLYSTY 560PF J	
C22	C91-0083-05	CERAMIC 0.01UF N	
C23 -26	C91-0085-05	CERAMIC 0.022UF N	
C27 ,28	C25-1722-57	LL-ELEC 2.2UF 50WV	
C29	C71-1710-15	CERAMIC 100PF J	
C30 ,31	C91-0083-05	CERAMIC 0.01UF N	
C32	C46-1727-36	MYLAR 0.027UF K	
C33	C24-1210-69	ELECTRO 10UF 16WV	
C34	C24-1222-71	ELECTRO 220UF 16WV	
C35 ,36	C46-1715-35	MYLAR 0.015UF J	ET
C35 ,36	C46-1715-35	MYLAR 0.015UF J	X
C35 ,36	C46-1722-35	MYLAR 0.022UF J	KP
C35 ,36	C46-1722-35	MYLAR 0.022UF J	UH
C35 ,36	C46-1722-35	MYLAR 0.022UF J	UE
C35 ,36	C46-1722-35	MYLAR 0.022UF J	M
C37	C25-1710-57	LL-ELEC 1UF 50WV	
C38	C25-1722-47	LL-ELEC 0.22UF 50WV	
C39	C25-1747-47	LL-ELEC 0.47UF 50WV	
C40	C47-1747-15	POLYSTY 470PF J	
C41 ,42	C46-1733-25	MYLAR 0.0033UF J	
C43 ,44	C52-1727-16	CERAMIC 270PF K	
C45 ,46	C46-1712-26	MYLAR 0.0012UF K	
C47 ,48	C24-1247-61	ELECTRO 47UF 16WV	
C49 ,50	C25-1710-57	LL-ELEC 1UF 50WV	
C51	C91-0083-05	CERAMIC 0.01UF N	
C52 ,53	C63-1733-05	CERAMIC 33PF J	
C54	C52-1710-26	CERAMIC 0.001UF K	
C55	C46-1715-46	MYLAR 0.15UF K	
C55	C46-1768-36	MYLAR 0.068UF K	
C56	C81-1268-57	TANTAL 6.8UF 16WV	
C57	C46-1747-35	MYLAR 0.047UF J	
C58	C24-1247-61	ELECTRO 47UF 16WV	
C59	C91-0083-05	CERAMIC 0.01UF N	
C60	C24-1210-69	ELECTRO 10UF 16WV	
C61	C55-1747-38	CERAMIC 0.047UF Z	
C62	C25-1710-57	LL-ELEC 1UF 50WV	
C63	C24-1233-67	ELECTRO 33UF 16WV	
C64	C91-0083-05	CERAMIC 0.01UF N	
C65	C25-1710-57	LL-ELEC 1UF 50WV	
C67	C24-1210-79	ELECTRO 100UF 16WV	
C68	C24-1447-77	ELECTRO 470UF 25WV	*
C69	C24-1410-87	ELECTRO 1000UF 25WV	*
C71 -73	C24-1010-79	ELECTRO 100UF 10WV	
C74	C24-1210-69	ELECTRO 10UF 16WV	
C75	C24-1447-77	ELECTRO 470UF 25WV	
C76 ,77	C24-1733-71	ELECTRO 330UF 50WV	
C78 ,79	C91-0083-05	CERAMIC 0.01UF N	
C80	C24-1747-51	ELECTRO 4.7UF 50WV	
C81	C55-1747-38	CERAMIC 0.047UF Z	
C82	C24-6547-57	ELECTRO 4.7UF 35WV	*
C84	C24-1047-69	ELECTRO 47UF 10WV	
C85	C55-1747-38	CERAMIC 0.047UF Z	
C86	C24-1210-69	ELECTRO 10UF 16WV	
C87	C55-1710-38	CERAMIC 0.01UF Z	KP
C87	C55-1710-38	CERAMIC 0.01UF Z	UH

www.hifiengine.com

PARTS LIST

Ref. No. 参照番号	Parts No. 部品番号	Description 部品名／規格	Remarks 備考
C87	C55-1710-38	CERAMIC 0.01UF Z	UE
C88	C46-1747-35	MYLAR 0.047UF J	
TC1	C05-0303-05	TRIMMER CAPACITOR	
-	E29-0094-05	TERMINAL BOARD	
CF1 ,2	L72-0120-05	CERAMIC FILTER	KP
CF1 ,2	L72-0120-05	CERAMIC FILTER	UH
CF1 ,2	L72-0120-05	CERAMIC FILTER	UE
CF1 ,2	L72-0120-05	CERAMIC FILTER	XM
CF1	L72-0130-05	CERAMIC FILTER	ET
CF2	L72-0135-05	CERAMIC FILTER	ET
CF3	L72-0082-05	CERAMIC FILTER (AM)	
L1	L30-0316-05	IFT (FM)	
L2	L30-0317-05	IFT (FM)	
L3	L32-0231-05	OSCILLATING COIL	
L4	L30-0337-05	IFT (AM)	
L5	L30-0283-05	IFT (AM)	
L6	L40-1021-11	INDUCTOR	
L7	L40-1011-11	INDUCTOR	
L8	L79-0125-05	FILTER	ET
L9	L40-2292-11	INDUCTOR	
T1	L19-0026-05	TRANSFORMER	
X1	L77-0573-05	CRYSTAL RESONATOR	
R1	R43-1212-15	FL-PROOF RD120 J 2E	
R10	R43-1256-05	FL-PROOF RD56 J 2E	
R17	R43-1210-15	FL-PROOF RD100 J 2E	
R33	R43-1233-05	FL-PROOF RD33 J 2E	
R37	R43-1233-05	FL-PROOF RD33 J 2E	
R123	R43-1256-05	FL-PROOF RD56 J 2E	
R180	R92-0173-05	RC 2.2M M 2H	
R183	R43-1256-05	FL-PROOF RD56 J 2E	
R188	R40-8318-58	RC 1.8M M 2H	
VR1	R12-3301-05	TRIMMING POT. 20K	
VR2	R12-2302-05	TRIMMING POT. 5K	
S1 -8	S40-1032-05	PUSH SWITCH	
D1 ,2	V11-3101-70	1SV100-T	
D3	V11-0051-05	1N60	
D4 -7	V11-0271-05	1S2076	
D12	V11-0271-05	1S2076	
D14 -20	V11-0271-05	1S2076	
D22 -30	V11-0271-05	1S2076	
D31	V11-0271-05	1S2076	ET
D33	V11-0271-05	1S2076	
D34	V11-0271-05	1S2076	ET
D34	V11-0271-05	1S2076	X
D36 ,37	V11-0271-05	1S2076	
D38	V11-0273-05	1S2076A	
D39 -45	V11-0295-05	W06B	
D46	V11-4108-80	XZ-122	
D47	V11-4101-20	XZ-060	
D48	V11-4103-60	XZ-051	
D49	V11-4101-20	XZ-060	
D50	V11-0271-05	1S2076	KP
D50	V11-0271-05	1S2076	M
D50	V11-0271-05	1S2076	UH
D50	V11-0271-05	1S2076	UE
D51	V11-0271-05	1S2076	M
D51	V11-0271-05	1S2076	UH
D51	V11-0271-05	1S2076	UE
FL1	V40-4400-40	FIP9A7	*
IC1	V30-0270-20	AN217P	
IC2	V30-0246-10	AN377	

Ref. No. 参照番号	Parts No. 部品番号	Description 部品名／規格	Remarks 備考
IC3	V30-0270-40	AN363N	
IC4	V30-0357-10	AN6135	
IC5	V30-0295-10	M51903L	
IC6	V30-0546-10	MN6147B	*
IC7	V30-0504-10	TRD7420A	*
IC8	V30-0407-10	MN1203	
Q1 ,2	V03-1685-20	2SC1685(Q,R,S)	*
Q3 ,4	V01-1127-30	2SA1127NC	*
IC3	V03-1685-20	2SC1685(Q,R,S)	*
IC4	V03-1685-20	2SC1685(R,S)	*
Q10 ,11	V03-1685-20	2SC1685(Q,R,S)	*
Q12	V01-1127-30	2SA1127NC	*
Q13 -15	V03-1685-20	2SC1685(Q,R,S)	*
Q17 ,18	V04-0330-00	2SD330	
Q19	V01-1127-30	2SA1127NC	*
Q20 ,21	V03-1685-20	2SC1685(Q,R,S)	*
Q22	V03-2274-20	2SC2274K(F)	*
Q23 -38	V01-1127-30	2SA1127NC	*
Q39 -46	V01-1127-30	2SA1127NC(R,S)	*
Q47 ,48	V03-1685-20	2SC1685(Q,R,S)	*
Q49	V03-1685-20	2SC1685(R,S)	*
Q50	V01-1127-30	2SA1127NC	*
	W02-0031-05	FM FRONT END	*
SWITCH (X13-2940-00)			
S1 ,2	S31-2060-05	SLIDE SWITCH	
S3 -8	S40-1033-05	PUSH SWITCH	
D1 -5	V11-0271-05	1S2076	

Note:
Component and circuitry are subject to modification to insure best operation under differing local conditions. This manual is based on, the U.S. (K) standard, and provides information on regional circuit modification through use of alternate schematic diagrams, and information on regional component variations through use of parts list.

Region	Code
U.S.A.	K
Canada	P
PX (Far East)	U
PX (Europe)	UE
Australia	X
South Africa	S
England	T
Europe and Scandinavia	E
Other Areas	M
Audio Club	H

There is no plan for producing units of S type.

A product of
TRIO-KENWOOD CORPORATION
6-17, 3-chome, Aobadai, Meguro-ku, Tokyo 153, Japan

KENWOOD ELECTRONICS, INC.
1315 E. Watsoncenter Rd, Carson, California 90745, U.S.A.
75 Seaview Drive, Secaucus, New Jersey 07094, U.S.A.
1098 North Tower Lane Bensenville, Illinois 60106, U.S.A.
TRIO-KENWOOD ELECTRONICS, N.V.
Leuvensesteenweg 504 B-1930 Zaventem, Belgium
TRIO-KENWOOD ELECTRONICS GmbH
Rudolf-Braas-Str. 20, 6056 Heusenstamm, West Germany
TRIO-KENWOOD FRANCE S.A.
5, Boulevard Ney, 75018 Paris, France
TRIO-KENWOOD SVENSKA AB
Kemistvagen 10A, S-183 21 Taby, Sweden
TRIO-KENWOOD (AUSTRALIA) PTY. LTD.
30 Whiting St., Artarmon, N.S.W. 2064, Australia
KENWOOD & LEE ELECTRONICS, LTD.
Room 501, Wang Kee Building, 5th Floor, 34-37, Connaught Road, Central, Hong Kong

© 1980-10 PRINTED IN JAPAN B51-0754-00 (G) 1943

www.hifiengine.com